Powerplants

HPT Clearances - CF34 SEI-756 Engine Manual, 72-00-00, Figure 233

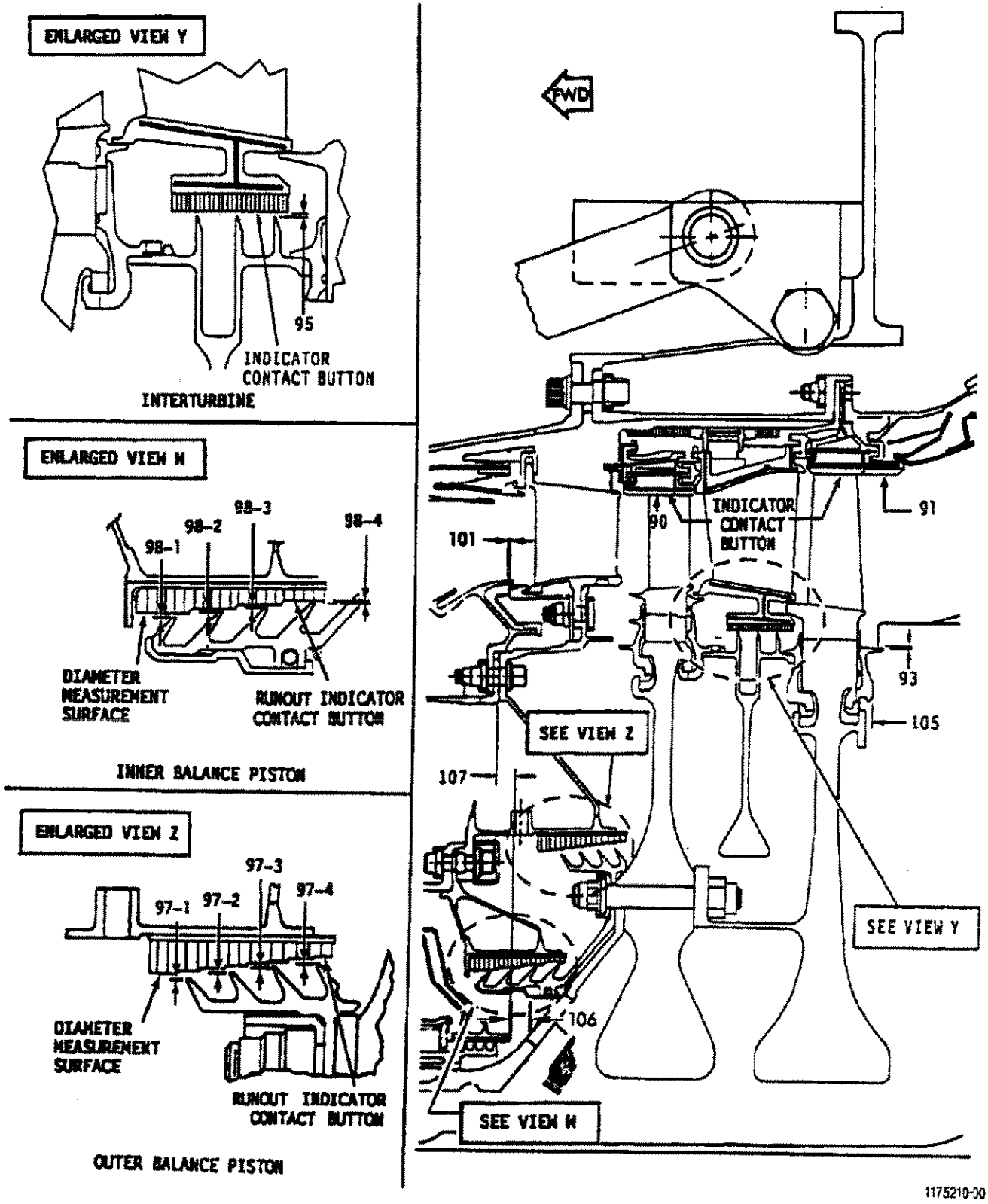
ENLARGED VIEW Y
95
INDICATOR CONTACT BUTTON
INTERTURBINE
ENLARGED VIEW M
98-1
98-2
98-3
98-4
DIAMETER MEASUREMENT SURFACE
RUNOUT INDICATOR CONTACT BUTTON
INNER BALANCE PISTON
ENLARGED VIEW Z
97-1
97-2
97-3
97-4
DIAMETER MEASUREMENT SURFACE
RUNOUT INDICATOR CONTACT BUTTON
OUTER BALANCE PISTON
FWD
INDICATOR CONTACT BUTTON
90
91
101
93
105
SEE VIEW Z
107
SEE VIEW Y
106
SEE VIEW M

1175210-00