DOCKET NO. SA-228

EXHIBIT NO. 20G

NATIONAL TRANSPORTATION SAFETY BOARD

WASHINGTON, D.C.

MINIMUM PERFORMANCE STANDARD FOR AIRCRAFT CARGO COMPARTMENT HALON REPLACEMENT FIRE SUPPRESSION SYSTEMS (2ND UPDATE) (DOT/FAA/AR-TN05/20)

by

[John W. Reinhardt]

technical note technical note

Minimum Performance Standard for Aircraft Cargo Compartment Halon Replacement Fire Suppression Systems (2nd Update)

John W. Reinhardt

June 2005

DOT/FAA/AR-TN05/20

This document is available to the public through the National Technical Information Service (NTIS), Springfield, Virginia 22161.

U.S. Department of Transportation
Federal Aviation Administration

NOTICE

This document is disseminated under the sponsorship of the U.S. Department of Transportation in the interest of information exchange. The United States Government assumes no liability for the contents or use thereof. The United States Government does not endorse products or manufacturers. Trade or manufacturer's names appear herein solely because they are considered essential to the objective of this report. This document does not constitute FAA certification policy. Consult your local FAA aircraft certification office as to its use.

This report is available at the Federal Aviation Administration William J. Hughes Technical Center's Full-Text Technical Reports page: actlibrary.tc.faa.gov in Adobe Acrobat portable document format (PDF).

Technical Report Documentation Page

1. Report No.	2. Government Accession No.	3. Recipient's Catalog No.
DOT/FAA/AR-TN05/20		

4. Title and Subtitle	5. Report Date
MINIMUM PERFORMANCE STANDARD FOR AIRCRAFT CARGO COMPARTMENT HALON REPLACEMENT FIRE SUPPRESSION SYSTEMS (2nd UPDATE)	June 2005
	6. Performing Organization Code AAR-440
7. Author(s) John W. Reinhardt	**8. Performing Organization Report No.**
9. Performing Organization Name and Address Federal Aviation Administration William J. Hughes Technical Center Airport and Aircraft Safety Research and Development Division Fire Safety Branch Atlantic City International Airport, NJ 08405	**10. Work Unit No. (TRAIS)** **11. Contract or Grant No.**
12. Sponsoring Agency Name and Address U.S. Department of Transportation Federal Aviation Administration Office of Aviation Research Washington, DC 20591	**13. Type of Report and Period Covered** Technical Note **14. Sponsoring Agency Code** ANM-112

15. Supplementary Notes

16. Abstract

This technical note presents the second update to the minimum performance standards that a Halon 1301 replacement or alternate system for aircraft cargo compartment must meet as part of the aircraft certification procedures. This document replaces report number DOT/FAA/AR-TN03/6. This standard considers gaseous and nongaseous fire suppression systems for full-scale fire testing. This report update includes the corrections made to the aerosol can simulator specifications, acceptance criteria section, and the new criteria for the aerosol can explosion test. In addition, some sections were added to the test requirements to clarify some testing procedures.

17. Key Words	18. Distribution Statement
Aircraft cargo compartment, Full-scale fire testing, Combustible fires, Bulk-load fires, Containerized fires, Surface burning, Flammable liquid fires, Aerosol explosion, Halon 1301 Replacement/alternative, Minimum performance standard, Gaseous and nongaseous fire suppression systems	This document is available to the public through the National Technical Information Service (NTIS), Springfield, Virginia 22161.

19. Security Classif. (of this report)	20. Security Classif. (of this page)	21. No. of Pages	22. Price
Unclassified	Unclassified	30	

Form DOT F1700.7 (8-72) **Reproduction of completed page authorized**

TABLE OF CONTENTS

	Page
EXECUTIVE SUMMARY	vii
1. INTRODUCTION	1
2. SCOPE	2
3. AGENT SELECTION GUIDANCE	3
3.1 Environmental	3
3.2 Toxicology	3
4. TEST REQUIREMENTS	3
4.1 Test Cell (Cargo Compartment)	3
4.2 Instrumentation	4
4.3 Fire Scenarios	4
4.3.1 Bulk-Load Fire	4
4.3.2 Containerized-Load Fire	5
4.3.3 Surface-Burning Fire	5
4.3.4 Aerosol Can Explosion Simulation	5
4.3.5 Aerosol Can Explosion Simulation (Short Version)	8
4.4 Ignition Source	8
4.4.1 Resistance Heat	8
4.4.2 Electrical Arc	8
4.5 Suppression System Design	9
4.6 Suppression System Activation	10
4.7 Test Duration	10
5. ACCEPTANCE CRITERIA	10
6. REFERENCES	12
APPENDICES	
A—Determination of Acceptance Criteria Values	
B—Aerosol Can Explosion Simulator Drawings	

LIST OF FIGURES

Figure		Page
1	Cargo Compartment Layout and Instrumentation Locations	13
2	Bulk-Load Fire Test Setup	13
3	Igniter Box	14
4	Containerized-Load Fire Test Setup	14
5	LD-3 Container	15
6	LD-3 Container Arrangement	15
7	Surface-Burning Fire Pan	16
8	Schematic of Aerosol Can Explosion Simulator	16
9	Aerosol Can Explosion Simulation Test Setup	17
10	Aerosol Can Explosion Simulation Test Setup (Short Version)	17
11	Acceptance Criteria Boundaries	18

LIST OF TABLES

Table		Page
1	Acceptance Criteria	18

LIST OF ACRONYMS

AD	Airworthiness Directive
CFR	Code of Federal Regulations
DC	Direct current
FAA	Federal Aviation Administration
GWP	Global Warming Potential
JAA	Joint Aviation Authority
JAR	Joint Airworthiness Requirements
MPS	Minimum performance standard
ODP	Ozone depletion potential

EXECUTIVE SUMMARY

This technical note establishes the minimum performance standard (MPS) that a Halon 1301 replacement aircraft cargo compartment fire suppression system must meet. This MPS was developed in conjunction with the International Aircraft Fire Protection Systems Working Group, formerly known as the International Halon Replacement Working Group. It describes the tests that shall be performed to demonstrate that the performance of the replacement agent and system provides the same level of safety as the currently used Halon 1301 system. The results of these tests will be used to determine the required concentration levels to adequately protect an aircraft cargo compartment against fire and hydrocarbon explosions. The Supplemental Type Certificate applicant shall provide the minimum agent protection concentration, density, etc., to the Federal Aviation Administration (FAA) Aircraft Certification Office with an objective way of measuring it. Currently, the FAA Transport Airplane Directorate, in conjunction with the Joint Aviation Authority, is developing an advisory circular to address the certification of an aircraft cargo compartment fire extinguishing or suppression system. This MPS update replaces the standard reported in FAA Technical Note DOT/FAA/AR-TN03/6, "Minimum Performance Standard for Aircraft Compartment Halon Replacement Fire Suppression Systems."

The four different MPS fire test scenarios that new cargo compartment fire suppression systems must meet are bulk-load fire, containerized-load fire, flammable liquid fire (surface burning), and an aerosol can explosion simulation. The bulk- and containerized-load fires, which are deep-seated fire scenarios, use shredded paper loosely packed in cardboard boxes to simulate the combustible fire load. The difference between these two tests is that in the bulk-load fire scenario the boxes are loaded directly into the cargo compartment, while in the containerized-load fire scenario, the boxes are stacked inside an LD-3 container. The surface-burning test (Class B fire) uses 0.5 U.S gallon (1.89 liters) of Jet A as fuel. The aerosol can explosion simulation tests are executed by using an aerosol can simulator containing a flammable and explosive mixture of propane, alcohol, and water. This mixture ignites or explodes when it is exposed to an arc from sparking electrodes. At least five tests per MPS scenario must be conducted. These tests shall be performed in a 2000-ft^3 simulated aircraft cargo compartment.

The suppression performance of a new agent, once the data is collected and analyzed, is then compared with the standard acceptance criteria to determine if it passes or fails the fire tests. None of the peak temperatures and areas under the time-temperature curves may exceed the values specified in the acceptance criteria table. The acceptance criteria are as follows:

- For the bulk-load fire scenario, the average of the five test peak temperatures shall not exceed 720°F (382°C), starting 2 minutes after the suppression system is initially activated until the end of the test. In addition, the average of the five test peak areas under the time-temperature curve shall not exceed 9940°F-min (5504°C-min). The area should be computed from 2 minutes (t_3) after the time of initial suppression system activation (t_2) to 28 minutes after t_3.

- For the containerized-load fire scenario, the average of the five test peak temperatures shall not exceed 650°F (343°C), starting 2 minutes after the suppression system is initially activated until the end of the test. The average of the five test peak areas under

the time-temperature curve shall not exceed 14,040°F-min (7,782°C-min). The area should be computed from 2 minutes (t_3) after the time of initial suppression system activation (t_2) to 28 minutes after t_3.

- For the surface-burning fire scenario, the average of the five test peak temperatures shall not exceed 570°F (299°C), starting 2 minutes (t_3) after the suppression system is initially activated until the end of the test, 3 minutes after t_3. In addition, the average of the five tests peak areas under the time-temperature curve shall not exceed 1230°F-min (665°C-min) for the same period mentioned in the previous sentence.

- For the aerosol can explosion simulation scenario, no evidence of an explosion shall be present in the compartment at the time the simulator is activated, such as no overpressure (0.0 psig) or deflagrations. In addition, when the agent concentration is below its inert concentration, the explosion intensity and peak pressures shall not be greater than the values exhibited during an explosive event when no suppression agent is present in the compartment.

Appendix A presents a table showing how the acceptance criteria values were determined based on the Halon 1301 test data. Appendix B contains the aerosol can explosion simulator drawings.

1. INTRODUCTION.

The Code of Federal Aviation Regulations (CFR) and Joint Airworthiness Requirements (JAR) require fire suppression systems for some classifications of cargo compartments. In the past, the aircraft industry selected Halon 1301 total flood fire suppression systems as the most effective means for complying with the regulations. Because of the ban on production of Halon 1301 (effective January 1994, as mandated by the Montreal Protocol), new fire suppression systems will need to be certified when Halon 1301 is no longer available. The tests described in this standard are one part of the total Federal Aviation Administration (FAA) and the Joint Aviation Authority (JAA) certification process for cargo compartment fire suppression systems. Compliance with other applicable regulations, some of which are listed below, is also required. Applicants attempting to certify replacement systems are encouraged to discuss the required process with regulatory agencies prior to conducting tests. Currently, the FAA Transport Airplane Directorate, in conjunction with the JAA, is developing an advisory circular to address the certification of aircraft cargo compartment fire extinguishing or suppression system employing halon replacement agents.

The following existing CFRs/JARs pertain to cargo compartment fire suppression systems: 14 CFR 25.851 [Doc. No.5066, 29 FR 18291, Dec. 24, 1964, as amended by Amdt. 25-54, 45 FR 60173, Sep. 11, 1980; Amdt. 25-72, 55 FR 29783, Jut. 20, 1990; Amdt. 25-74, 56 FR 15456, Apr. 16, 1991] "(b) Built-in fire extinguishers. If a built-in fire extinguisher is provided-

(1) Each built-in fire extinguishing system must be installed so that-

(i) No extinguishing agent is likely to enter personnel compartments will be hazardous to the occupants; and

(ii) No discharge of the extinguisher can cause structural damage.

(2) The capacity of each required built-in fire extinguishing system must be adequate for any fire likely to occur in the compartment where used, considering the volume of the compartment and the ventilation rate."

14 CFR 25.855 [Doc. No.5066, 29 FR 18291. Dec. 24, 1964, as amended by Amdt. 25-15, 32FR 13266, Sep. 20, 1967; Amdt. 25-32, 37 FR 3972, Feb. 24, 1972; Amdt. 25-60, 51 FR 18242, May 16, 1986; Amdt. 25-72, 55 FR 29784, Jut. 20, 1990; Amdt. 25-93, 63 FR 8048, Feb. 17, 1998] "(h) Flight tests must be conducted to show compliance with the provisions of Sec. 25.857 concerning-

(1) Compartment accessibility,

(2) The entries of hazardous quantities of smoke or extinguishing agent into compartments occupied by the crew or passengers, and

(3) The dissipation of the extinguishing agent in Class C compartments.

(i) During the above tests, it must be shown that no inadvertent operation of smoke or fire

detectors in any compartment would occur as a result of fire contained in any other compartment, either during or after extinguishment, unless the extinguishing system floods each such compartment simultaneously."

14 CFR 25.857 [Doc. No.5066, 29 FR 18291, Dec. 24, 1964, as amended by Amdt. 25-32, 37FR 3972, Feb. 24, 1972; Amdt. 25-60, 51 FR 18243, May 16, 1986; Amdt. 25-93, 63 FR 8048, Feb. 17, 1998] "(c) Class C. A Class C cargo compartment is one not meeting the requirements for either a Class A or Class B compartment but in which-

(1) There is a separate approved smoke detector or fire detector system to give warning at the pilot or flight engineer station.

(2) There is an approved built-in fire extinguishing or suppression system controllable from the cockpit;

(3) There are means to exclude hazardous quantities of smoke, flames, or extinguishing agent, from any compartment occupied by the crew or passengers;

(4) There are means to control ventilation and drafts within the compartment so that the extinguishing agent used can control any fire that may start within the compartment."

In addition to these regulations, the FAA issued Airworthiness Directive (AD) 93-07-15 that required, among other things, that after November 2, 1996, the Class B cargo compartments on Boeing Models 707, 727, 737, 747, and 757 and McDonnell Douglas Models DC-8, DC-9, and DC-10 series airplanes have improved fire protection features. One of three options available to comply with this AD is to modify Class B cargo compartments on these airplanes to comply with the requirements for Class C compartments. This option would require the installation of a fire suppression system.

One other area of rulemaking activity relating to cargo compartment suppression system requirements is the "Revised Standards for Cargo or Baggage Compartments in Transport Category Airplanes, Final Rule," amendments 25-07 and amendments 121-269, effective March 19, 1998. This rule eliminates Class D cargo compartments on newly certified aircraft under 14 CFR Part 25 and requires existing Class D compartments on 14 CFR Part 121 certified passenger aircraft to comply with the detection and suppression/extinguishing system aspects of Class C cargo compartment requirements by March 19, 2001. This rule was issued by the FAA and at this time applies only to aircraft operated by U.S.-based airlines.

2. SCOPE.

This document establishes the minimum performance standard (MPS) that a cargo compartment halon replacement fire suppression system must meet. It describes the tests that shall be performed to demonstrate that the performance of the replacement agent and systems equals the performance of the currently approved Halon 1301 systems.

3. AGENT SELECTION GUIDANCE.

3.1 ENVIRONMENTAL.

The replacement agent must be approved under the U.S. Environmental Protection Agency, Clean Air Act, Significant New Alternatives Policy program, or other international governmental approving programs. The primary environmental characteristics to be considered in assessing a new agent are Ozone Depletion Potential (ODP), Global Warming Potential (GWP), and Atmospheric Lifetime. The agent selected should have environmental characteristics in harmony with international laws and agreements, as well as applicable local laws. This MPS sets out the means of assessing the technical performance of potential alternatives. In selecting a new agent, it should be noted that an agent that does not have a zero or near-zero ODP and the lowest practical GWP and Atmospheric Lifetime may have problems in terms of international availability and commercial longevity.

3.2 TOXICOLOGY.

The toxicological acceptability of an agent is dependent on how it is used. As a general rule, the agent must not pose an unacceptable health hazard for workers during installation and maintenance of the suppression system. At no time should the concentration cause an unacceptable health hazard in areas where passengers or workers are present or where leakage could cause an agent to enter an occupied area. Following the release of the agent during fire suppression, the cumulative effect of the agent, its pyrolytic breakdown products, and the by-products of combustion must not pose an unacceptable health hazard.

14 CFR 25.851, 25.855, and 25.857 all address the issue of hazardous quantities of smoke, gas, or extinguishing agent in occupied compartments. The fire tests described in this MPS do not address these issues.

4. TEST REQUIREMENTS.

4.1 TEST CELL (CARGO COMPARTMENT).

The fire tests are conducted inside a simulated, below-floor cargo compartment of a wide-body aircraft. The volume of the compartment is 2000 ±100 cubic feet (56.6 ±2.8 m^3), see figure 1. The leakage rate from the compartment is 50 ±5 cubic feet per minute (1.4 ±0.14 cubic meter per minute). The leakage from the compartment is configured to simulate the U shape of the cargo door seals that are on an actual aircraft. This can be done by installing perforated ducts inside the compartment in the shape of the perimeter of a cargo door and then venting those ducts outside the test article. A variable speed fan installed in the exit of the duct draws air out of the compartment. One-inch-diameter holes spaced at 5-inch (12.7-cm) intervals in a round, 4-inch-diameter steel duct has been shown to be effective. The perforated ducts are installed on the side of the cargo compartment opposite the ignition box for the bulk- and containerized-load fire scenarios. The return air that goes back into the compartment should be evenly distributed and not from anyone location.

4.2 INSTRUMENTATION.

Temperature measurements are taken throughout the cargo compartment. Type K chromel/alumel 22-gauge thermocouples have been found to be effective at measuring temperatures in the range these fire scenarios produce. Ceiling thermocouples are evenly spaced along the compartment ceiling at 5-foot intervals. One of the ceiling thermocouples is installed directly above the initial ignition location for all fire scenarios. The beads of the ceiling thermocouples are 1 inch (2.5 cm) below the compartment ceiling. At least one thermocouple is placed on the compartment sidewall 1 foot below ceiling level and centered on the fire ignition location. The sidewall thermocouple is installed on the compartment wall nearest the ignition location. At least two additional thermocouples are placed in and above the box containing the igniter for the bulk- and containerized-load fire scenarios. The purpose of these two thermocouples is to monitor and verify the ignition of the boxes. The readings are not part of the acceptance criteria. Care should be taken to prevent these thermocouples from contacting the energized coil of the nichrome wire.

A continuous gas analyzer with a real-time display of the gas (extinguishing agent) volumetric concentration is required for the aerosol can explosion simulation fire scenario when the suppression system is a gaseous total flood system (short-test version). A continuous gas analyzer may also be required, depending on the suppression system design, for the bulk- and containerized-load fire scenarios. The accuracy of the analyzer shall be ±5% of the reading. The gas analyzer is used to measure the concentration of the gaseous suppression agent. The data-sampling rate for all the temperature measurements and the gas concentrations should be at least one data point every 5 seconds.

A pressure transducer is also required for the aerosol can explosion simulation fire scenario. The maximum transducer pressure range is 0-50 psig. The minimum frequency response of the transducer is 3000 Hz. Omega® manufactures several transducers suitable for this application. The transducer is mounted on the ceiling in the geometric center of the compartment. The data-sampling rate for the pressure transducer is at least 3000 data points per second.

4.3 FIRE SCENARIOS.

The aircraft cargo compartment fire suppression system must successfully control the following four fire scenarios. Five replicate tests are required for each fire test scenario.

4.3.1 Bulk-Load Fire.

The fire load for this scenario consists of single-wall corrugated cardboard boxes, with nominal dimensions of 18 by 18 by 18 inches (45.7 by 45.7 by 45.7 cm). The weight per unit area of the cardboard is 0.11 lbs/ft^2 (0.5417 kg/m^2). The boxes are filled with 2.5 pounds (1.1 kg) of loosely packed standard weight office paper shredded into strips (not confetti) weighing 4.5 ±0.4 pounds (2.0 ±0.2 kg). The boxes are conditioned to room standard conditions. The flaps of the boxes are tucked under each other without using staples or tape. The boxes are stacked in two layers in the cargo compartment in a quantity representing 30% of the cargo compartment empty volume. For a 2000-cubic-foot (56.6-m^3) compartment, this requires 178 boxes. The boxes touch each other to prevent any significant air gaps between boxes. The fire inside the ignition box is

started by applying 115 Vac to a 7-foot (2.1-m) length of nichrome wire. The wire is wrapped around four folded (in half) paper towels. The resistance of the nichrome igniter coil is approximately 7 ohms. The igniter is placed into the center of a box on the bottom outside row of the stacked boxes. Several ventilation holes are placed in the side of the box to ensure that the fire does not self-extinguish. Ten 1.0-inch (2.5-cm) -diameter holes have been shown to be effective (see figures 2 and 3).

4.3.2 Containerized-Load Fire.

The same type of paper-filled cardboard boxes and the same type of igniter used in the bulk-load fire scenario is used in this scenario. The boxes are stacked inside an LD-3 container as shown in figure 4. The boxes touch each other to prevent any significant air gaps between them. The container is constructed of an aluminum top and inboard side, a Lexan (polycarbonate) front, and the remainder of steel. Two rectangular slots for ventilation are cut into the container in the center of the Lexan front and in the center of the sloping sidewall. The slots are 12 by 3 ±1/4 inches (30.5 by 7.6 ±0.6 cm) (see figure 5). The igniter is placed in a box on the bottom row, in the center column next to the sloping side of the container. Ventilation holes are placed on the front face of the box facing the ventilation hole. Ten 1.0-inch (2.5-cm) -diameter holes have been shown to be effective. Two additional empty LD-3 containers are placed adjacent to the first container (see figure 6).

4.3.3 Surface-Burning Fire.

One-half U.S. gallon (1.9 liters) of Jet A fuel in a square pan is used for this scenario. The pan is constructed of 1/8-inch (0.3-cm) steel and measures 2 feet by 2 feet by 4 inches high (60.9 by 60.9 by 10.2 cm). Approximately 13 fluid ounces (385 ml.) of gasoline should be added to the pan to make ignition easier. Two and one-half gallons (9.5 liters) of water placed in the pan has been found to be useful in keeping the pan cool and minimize warping. This quantity of fuel and pan size is sufficient to burn vigorously for approximately 4 minutes if not suppressed. The pan should be positioned in the cargo compartment in the most difficult location for the particular suppression system being tested. The pan is located 12 inches below the cargo compartment ceiling if the suppression system uses a gaseous agent with a density greater than air at standard pressure and temperature (14.7 psia (101.3 kPa), 59.0°F (15°C)). The pan is 12 inches (30.5 cm) above the floor of the compartment if the suppression system uses a gaseous agent with a density less than air at standard pressure and temperature. The pan is placed in the compartment at mid height when the suppression agent has a density equal to that of air. The pan is located at the maximum horizontal distance from any discharge nozzles for all tests, regardless of the suppression agent used (see figure 7).

4.3.4 Aerosol Can Explosion Simulation.

This scenario addresses the hazards of an exploding aerosol can during an aircraft cargo compartment fire. This test protocol uses a modified version of the bulk-load fire test scenario to determine the activation time of the aerosol can simulator. Based on experiments with aerosol cans subjected to fires, the FAA William J. Hughes Technical Center developed an aerosol can simulator (figures 8 and B-1 in appendix B) that releases a mixture of propane and alcohol through a large-area valve and across sparking electrodes [1]. This specific test protocol may be

substituted with the shorter protocol version specified in section 4.3.5. For example, the short-test protocol version may be used with gaseous fire suppression agents or if the system does not have unique capabilities, such as thermodynamic cooling that would need to be demonstrated during a fire test.

The cargo compartment is loaded with corrugated cardboard boxes, galvanized steel pipes, and the aerosol can explosion simulator. Each box is a single-wall corrugated cardboard box with nominal dimensions of 18 by 18 by 18 inches (45.7 by 45.7 by 45.7 cm). The weight per unit area of the cardboard is 0.11 lbs/ft^2 (0.5417 kg/m^2). The boxes are filled with 2.5 pounds (1.1 kg) of loosely packed standard weight office paper shredded into strips (not confetti) weighing 4.5 ±0.4 pounds (2.0 ±0.2 kg). The flaps of the boxes are tucked under each other without using staples or tape. The boxes are stacked in two layers in the cargo compartment in a quantity representing about 10% of the cargo compartment empty volume. For a 2000-cubic-foot (56.6-m^3) compartment, this requires 58 boxes. The boxes touch each other to prevent any significant air gaps between boxes. The boxes are arranged as shown in figure 9. Three galvanized steel pipes, with a thermocouple attached to the outer surface (centered) of each pipe, is inserted (one per box) in the boxes adjacent to the box above the ignition box. The schedule 80 pipes are 8.25 inches (20.96 cm) long and have an outer diameter of 1.75 inches (4.45 cm). The main function of the three galvanized steel pipes is to hold the thermocouples in place rather than simulating the heating of an aerosol can. The fire in the box is initiated by applying 115 Vac to a 7 foot (2.1 m) length of nichrome wire. The wire is wrapped around four folded (in half) paper towels. The resistance of the nichrome igniter coil is approximately 7 ohms. The igniter is placed into the center of a box on the bottom outside row of the stacked boxes. Several ventilation holes are placed in the side of the box to ensure that the fire does not self-extinguish. Ten 1.0-inch (2.5-cm) -diameter holes have been shown to be effective (see figure 3).

The aerosol can explosion simulator is placed near the centerline of the cargo compartment (as long as there is no agent impingement on the simulator or electrodes), at least 5 feet (1.52 m) forward from the boxes, aft of the boxes containing the igniter and pipes. The unit could also be mounted outside the compartment, with the discharge port inside the compartment, to prevent heat damage; but the location of the igniter, with relation to the simulator discharge port, must be maintained. The simulator's sparking electrodes are located 3 feet in front of the simulator discharge port and 2 feet above the floor. The simulator has a cylindrical pressure vessel for storing the base product hydrocarbon propellant. The pressure vessel is capable of withstanding a minimum pressure of 300 psi (2068.5 kPa). The pressure vessel has a ball valve to rapidly discharge the propellant, capable of withstanding a minimum pressure of 300 psi (2068.5 kPa). The port diameter of the ball must be 1.5 inches (3.8 cm) (note: a ball valve is typically classified according to the diameter of the pipe that it connects to, but this is not necessarily the size of the ball port). The ball valve is capable of rotating from the fully closed position to the fully open position in less than 0.1 second in order to form a vapor cloud. Longer opening durations will significantly affect the size of the vapor cloud formed and, hence, the explosive force. The ball valve can be activated by any suitable means, including pneumatic or hydraulic actuators or manually via the appropriate linkage. The pressure vessel is mounted vertically above the ball valve to allow for complete expulsion of the liquid contents. A discharge elbow located vertically under the ball valve directs the contents horizontally (see figures 8 and B-1).

The following list describes the major components of the aerosol can simulator.

- Pressure Vessel. A steel 2-inch (5.1-cm) -diameter, 11-inch (27.9-cm) -long schedule 80 pipe welded or capped at one end.

- Ball Valve. The 2-inch (5.1-cm) valve is constructed of a material capable of withstanding interaction with ethanol and propane. A DynaQuip stainless steel valve has been found suitable for this application.

- Ball-Valve Actuator. A pneumatic rotary actuator is suitable for quickly and reliably rotating the ball valve from closed to fully open. A Speedaire 90-degree actuator with a 2-inch (5.1-cm) bore performs well.

- Propellant Heater. A system for heating the pressurized propellant mix after transfer to the pressure vessel is provided. This could include a hot-air gun directed toward the pressure vessel, a hot-wire wrap, or other suitable means.

- Pressure Gauge. A suitable device for measuring the pressure of the contents is installed on the simulator pressure vessel, capable of measuring the pressure to within ±5 psi (34.5 kPa).

- Propellant Mix. The base product/propellant mix is 20% liquid propane (3.2 ounces [0.09 kg]), 60% ethanol (denatured alcohol, 9.6 ounces [0.27 kg]), and 20% water (3.2 ounces [0.09 kg]). The total weight of the base product/propellant mix is 16 ounces.

- Spark Igniters. A set of direct current (DC) spark igniters is used to ignite the propellant/base product mix discharged from the pressure vessel. An ignition transformer capable of providing a 10,000-volt output has been found to be suitable for powering the igniters, which should be placed 36 inches (91.4 cm) from the point of discharge. The spark igniter gap is set at 0.25 inch (0.64 cm). The igniter should be protected from the rapidly discharged simulator contents by shielding it. A bent piece of sheet metal, like a ramp, provides adequate protection.

The procedure for setting up the aerosol can explosion simulator is as follows.

Weigh the empty aerosol can explosion simulator device on a suitable scale and zero the scale. Place 9.6 ounces (0.27 kg) of ethanol (denatured alcohol) and 3.2 ounces (0.09 kg) of water into the pressure vessel. Transfer 3.2 ounces (0.09 kg) of liquid propane into the pressure vessel. Remove all transfer lines and check final mass. Mount the simulator device in the forward compartment bulkhead in a manner that directs the discharge across the spark igniters. The simulator device discharge port and the spark igniter are 2 feet (60.9 cm) above the compartment floor, and the spark igniter is 3 feet away from the discharge port. The simulator device discharge port is located on the centerline of the aircraft, 5 feet forward of the first rows of cardboard boxes spanning the width of the compartment. Again, the simulator device may be placed outside the cargo compartment with the discharge port installed on the compartment bulkhead. Heat the pressure vessel to raise the pressure of the contents to 240 ±5 psi

(1655 ±34.4 kPa). Activate the suppression agent/system and the aerosol can explosion simulator as described in section 4.5.

4.3.5 Aerosol Can Explosion Simulation (Short Version).

As previously explained, the shorter version of the aerosol can explosion simulation test protocol may be used for gaseous agents in lieu of the version specified in section 4.3.4.

In the short version, the aerosol can explosion simulator device is placed inside the empty standard compartment (see figure 10). The simulator device is prepared as specified in section 4.3.4. This test starts when the fire suppression agent is discharged. The simulator device is activated at least 2 minutes after agent discharge. The activation time is dictated by the measured volumetric concentration, within ±0.1% of the minimum protection concentration. The minimum concentration is measured 2 feet (60.9 cm) above the floor, near the sparking electrodes. The agent concentration must be measured during the test, and calculation of agent concentration based on the leakage rate is not permitted. The gas-sampling probe is 36 inches (91.4 cm) from the exit of the simulator device and 18 inches (45.7 cm) to the side of the spark igniters (starboard or portside). The applicant must demonstrate that the system is capable of providing sufficient agent, at least to maintain the minimum inert concentration. The exploding aerosol can test scenario shall be conducted for at least 180 minutes or until the simulator device is activated, whichever is shorter.

4.4 IGNITION SOURCE.

Two types of ignition sources are used during the execution of these tests, resistance heat and electrical arc.

4.4.1 Resistance Heat.

Applying 115 Vac to a 7-foot length (2.13 m) of nichrome wire ignites the bulk- and containerized-load materials. The wire is wrapped around four folded (in half) paper towels. The resistance of the nichrome igniter coil is approximately 7 ohms. The igniter is placed in the center of the ignited box.

4.4.2 Electrical Arc.

A set of DC arc igniters are used to ignite the fuel in the surface burning test and the propellant/base product mixture in the aerosol can explosion simulation test. The igniters are connected to a transformer capable of providing 10,000 volts and 23 mA output. The interchangeable ignition transformer is manufactured by Franceformer, model number 37.9 (LAHV). The igniters are placed 36 inches (91.4 cm) from the point of discharge for the aerosol explosion simulation test. The igniters are placed about 0.25 inch (6.35 mm) above the surface of the fuel for the surface-burning scenario. The gap in between the two electrodes is 0.25 inch (6.35 mm).

4.5 SUPPRESSION SYSTEM DESIGN.

Some aspects of the fire suppression system to be installed in an aircraft cargo compartment shall be based on the results of the MPS fire tests. For example, these test results will provide the required concentration levels to adequately suppress standardized cargo fires and a hydrocarbon explosion, based on quantitative measurements, and not extrapolated from the bay volume concentration. Extrapolation of data to account for the required duration and analysis for cargo load configurations may be acceptable provided there is sufficient test data to support the analyses. The agent concentrations for the required duration of a diversion, accounting for leakage rates in an empty cargo compartment, must be demonstrated to be equal to or greater than that established in the MPS tests. It should also be noted that the initial concentrations to knockdown the initial fire flames and the concentration to control the fire shall be determined, which could be different values. The method of measuring the concentration of agent in the required flight test shall not use the arithmetic average of the probes.

The selected agent is required to be compatible with the aircraft material to prevent problems like corrosion.

The following provides a synopsis of the required airplane design minimum fire protection when associated with the four MPS test scenarios.

MPS Test	Airplane Design Minimum Knockdown Concentration is MPS Test-Demonstrated Maximum Concentration for Knockdown of:	Airplane Design Minimum Sustained Concentration is MPS Test-Demonstrated Maximum Concentration to:
Bulk-Load Test	Flames	Maintain continued fire suppression
Containerized-Load Test	Flames	Maintain continued fire suppression
Surface-Burning Test	Flames	Prevent reignition of Class-B fire
Aerosol Can Explosion Simulation	Flames (long version)	Prevent hydrocarbon explosion

The minimum agent concentration or system configuration (in the case of nongaseous systems) shall be dictated by the fire protection system performance during the MPS tests. The basic (knockdown and sustained) suppression concentration requirements will be established during the MPS tests. As mentioned before, the volumetric concentration is based on an empty 2000-ft^3 cargo compartment. The minimum selected value or configuration shall be the one(s) that was (were) capable of suppressing/inerting all four MPS fire scenarios. The aircraft cargo compartment shall always be protected against any of the MPS-specified fire threats. Variable metrics of not only duration but also compartment size and leakage rate should be accounted for by maintaining objective measurement of minimum concentration of agent in the cargo compartment. To measure the concentration levels that will dictate the minimum concentration requirements that will be demonstrated on an aircraft, the suppression agents shall be measured in a nonfire test in a discharge that is identical to the agent discharge in an actual fire test. This

will eliminate any possible effect from the by-products of combustion and fire on the gas/agent analyzer readings.

4.6 SUPPRESSION SYSTEM ACTIVATION.

For the bulk-load, containerized-load, and surface-burning fire scenarios, the suppression system is activated 60 seconds after any one of the ceiling-mounted thermocouples equals or exceeds 200°F (93.3°C).

For the aerosol can explosion simulation fire scenario (long version), the suppression system is activated 60 seconds after any ceiling thermocouple equals or exceeds 200°F (93.3°C) after the start of the fire. The aerosol can simulator device is activated 5 minutes after any thermocouple attached to the galvanized steel pipes inside the cardboard boxes reaches 212°F (100°C). In the event that the thermocouples attached to the pipes do not reach 212°F (l00°C) or the fire is completely extinguished, activation of the aerosol can simulator device is not required. The suppression system must not directly impinge upon or affect the normal operation of the aerosol can simulator device and electrodes.

For the aerosol can explosion simulation fire scenario (short version), refer to section 4.3.5 for details.

4.7 TEST DURATION.

The duration of the bulk- and containerized-load fire scenario tests is 30 minutes after the activation of the suppression system. The fifth test of the bulk- and containerized-load fire scenarios must be conducted for at least 180 minutes and must ensure that the temperatures at the end of the test are stable or decreasing. If the system tested is a hybrid system (dual agent), the bulk- and containerized-load fire scenarios must be run for a minimum of 180 minutes.

The surface-burning fire test is conducted for 5 minutes from the time the suppression system is activated. (Note: the surface-burning fire test self-extinguishes in less than 10 minutes due to the consumption of the Jet A fuel.)

The aerosol can explosion simulation fire test shall be conducted for at least 180 minutes or until the aerosol can simulator device is activated, whichever is shorter.

5. ACCEPTANCE CRITERIA.

The acceptance criteria determine whether a suppression system passes or fails the MPS tests. The criteria depend on three factors: peak temperature, the area under the time-temperature curve, and evidence of explosion. The MPS bulk-load, containerized-load, and surface-burning tests use the peak temperature and area criteria, while the aerosol can explosion simulation test depends on the evidence of explosion. The time-temperature area is calculated by multiplying the temperature at a specific time by the time increment and then adding up all the areas calculated or integrating the temperature versus time curve. Table 1 provides the values of the pass/fail criteria. Figure 11 shows the critical times during a test for computing the acceptance criteria for the bulk- and containerized-load fire scenarios.

The acceptance criteria for the bulk-load fire scenario is that the average of the five test peak temperatures shall not exceed 720°F (382°C), starting 2 minutes after the suppression system is initially activated until the end of the test. In addition, the average of the five tests peak areas under the time-temperature curve of the compartment thermocouples shall not exceed 9940°F-min (5504°C-min). The area is computed from 2 minutes after the time of initial suppression system activation until the end of the test (30 minutes after the agent was discharged).

The criteria for the containerized-load fire scenario is that the average of the five test peak temperatures shall not exceed 650°F (343°C), starting 2 minutes after the suppression system is initially activated until the end of the test. The average of the five test peak areas under the time-temperature curve shall not exceed 14,040°F-min (7,782°C-min). The area is computed from 2 minutes after the time of initial suppression system activation until the end of the test (30 minutes after the agent was discharged).

The acceptance criteria for the surface-burning fire scenario is that the average of the five test peak temperatures shall not exceed 570°F (299°C), starting 2 minutes after the suppression system is initially activated until the end of the test (5 minutes after the agent was discharged). In addition, the average of the five test peak areas under the time-temperature curve shall not exceed 1230°F-min (665°C-min) over the 5-minute interval following agent discharge.

These criteria values for the bulk-load, containerized-load, and surface-burning fire tests were based on the Halon 1301 test data and computed using the analysis presented in appendix A.

The criterion for the aerosol can explosion simulation scenario is that there is no evidence of an explosion or reaction. Evidence of an explosion or reaction includes deflagrations, flashes, and overpressures, etc. There shall be no overpressures (zero pressure rise). In addition, when the agent concentration is below its inert concentration, the explosion intensity and peak pressures shall not be greater than the values exhibited during an explosive event when no suppression agent is present in the compartment. To find more information on this subject, refer to reference 2.

For systems tested using the diversion time (instead of the 30 minutes), the average peak temperature is determined by using the collected data that is between 2 minutes after discharging the agent and the diversion time. The average of the five test peak temperatures shall not exceed the values presented in table 1. For the peak area under the time-temperature curve, the 2- to 28-minute boundaries and criteria apply.

Five tests must be conducted for each scenario. The peak temperature and area under the time-temperature curve must be determined for each test. The five test peaks shall be averaged and compared to the acceptance criteria values (pass/fail). To pass the MPS tests, the average of the new agent performance values shall be equal or less than the acceptance criteria values provided in table 1. Table 1 summarizes the acceptance criteria for the four fire tests.

6. REFERENCES.

1. T. Marker, "Initial Development of an Exploding Aerosol Can Simulator," FAA report DOT/FAA/AR-TN97/103, April 1998.

2. J. Reinhardt, "Behavior of Bromotrifluoropropene and Pentafluoroethane When Subjected to a Simulated Aerosol Can Explosion," FAA report DOT/FAA/AR-TN04/4, May 2004.

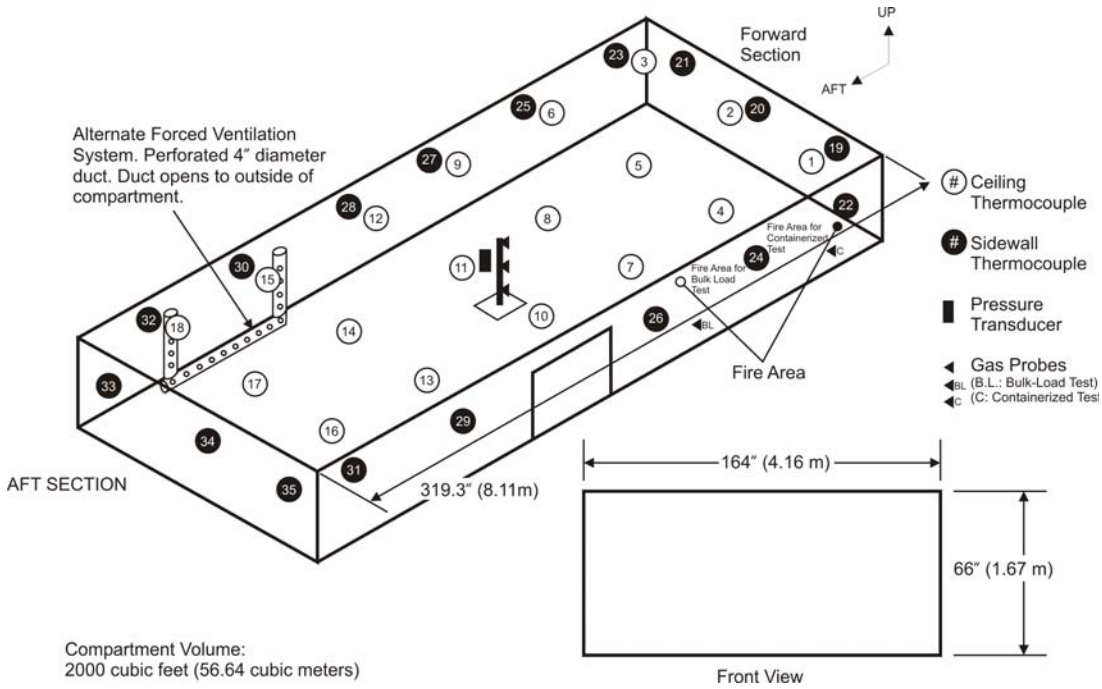

FIGURE 1. CARGO COMPARTMENT LAYOUT AND INSTRUMENTATION LOCATIONS

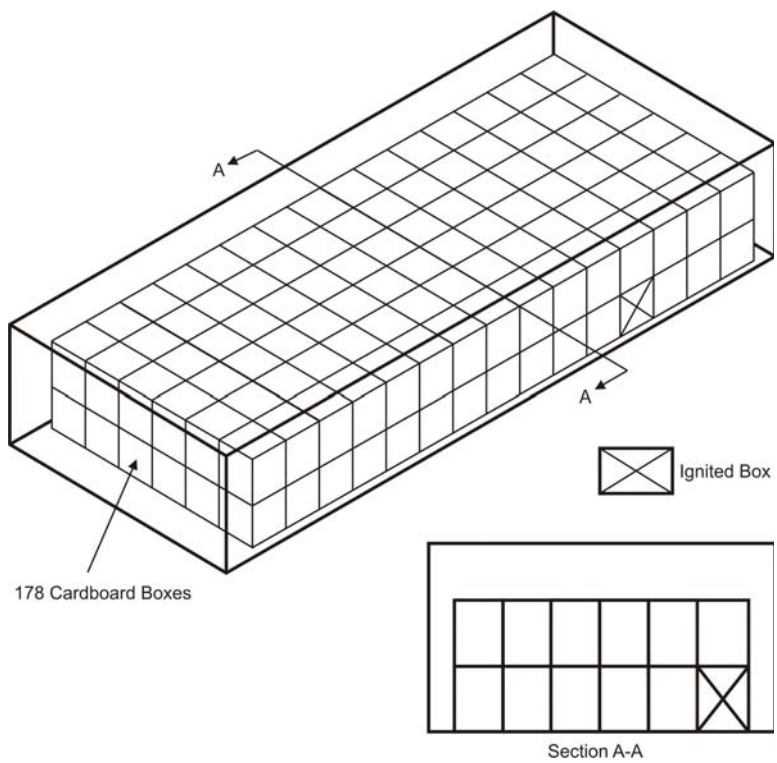

FIGURE 2. BULK-LOAD FIRE TEST SETUP

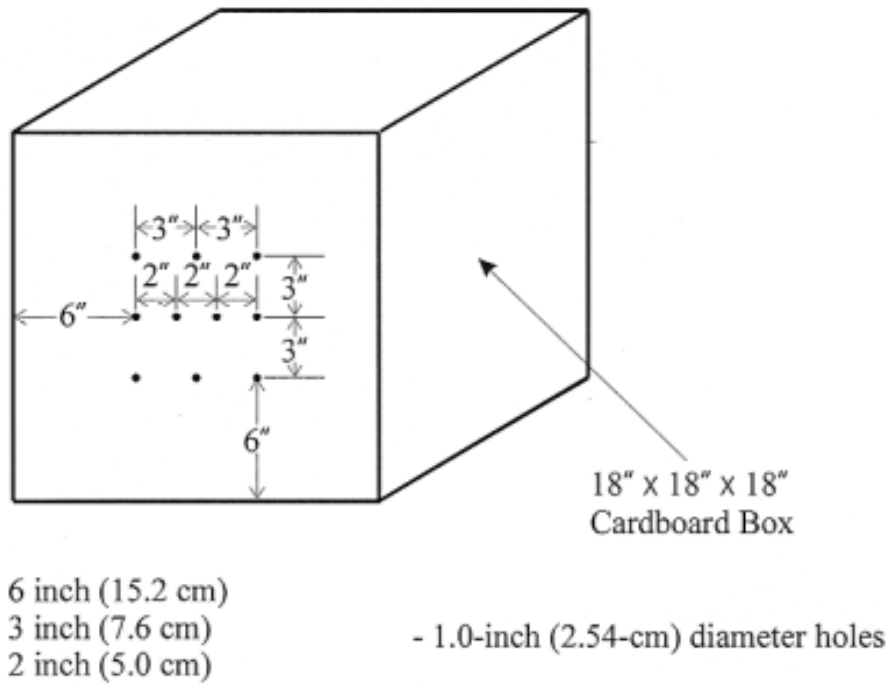

FIGURE 3. IGNITER BOX

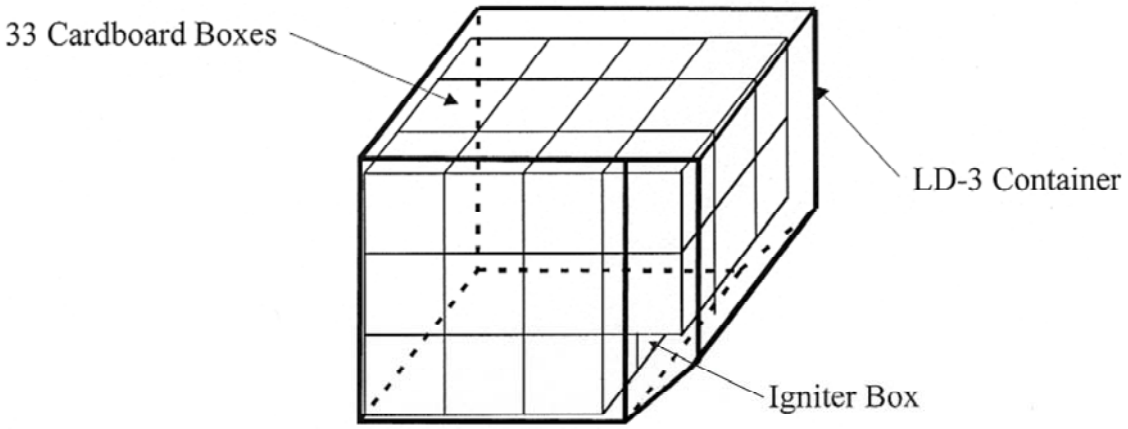

FIGURE 4. CONTAINERIZED-LOAD FIRE TEST SETUP

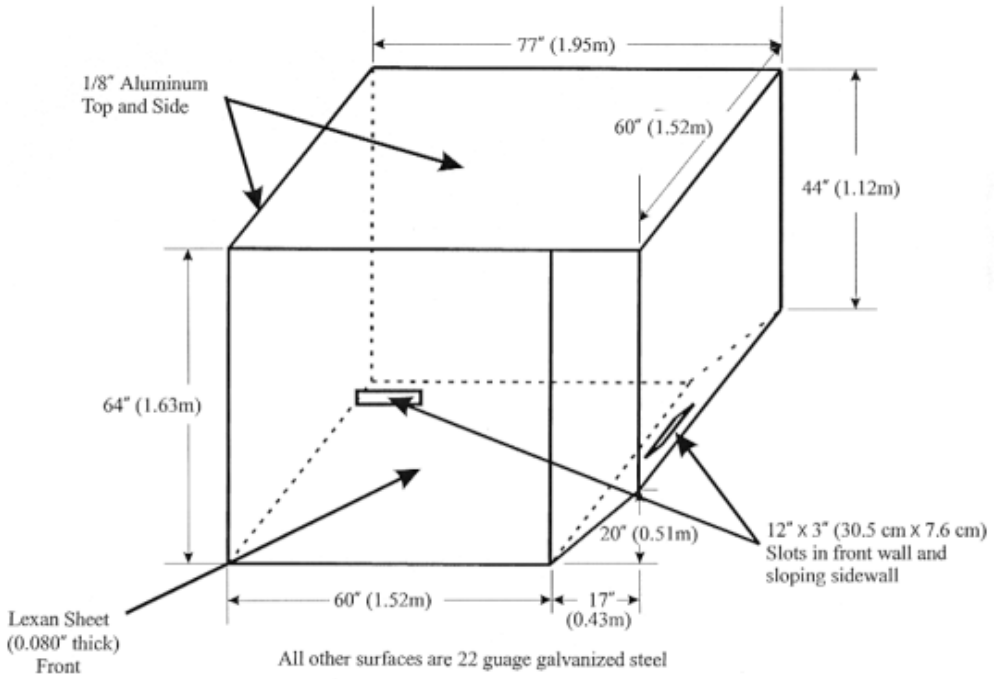

FIGURE 5. LD-3 CONTAINER

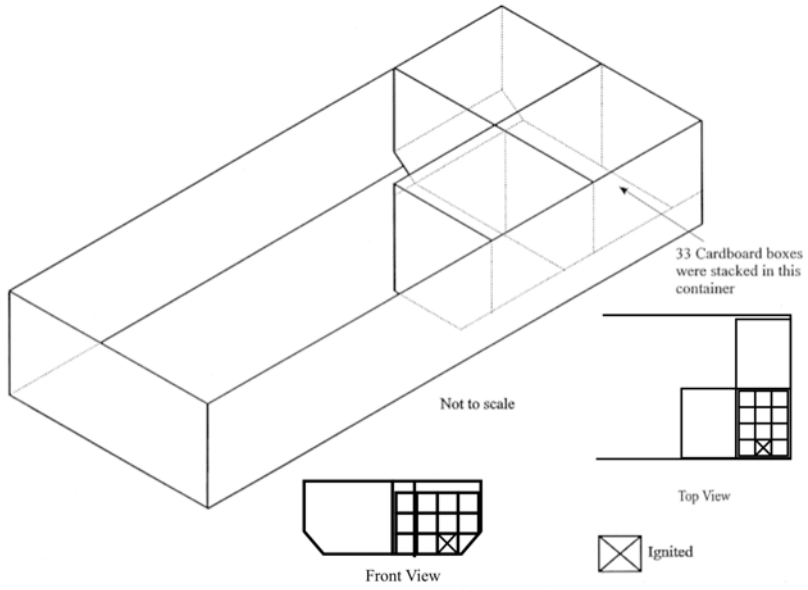

FIGURE 6. LD-3 CONTAINER ARRANGEMENT

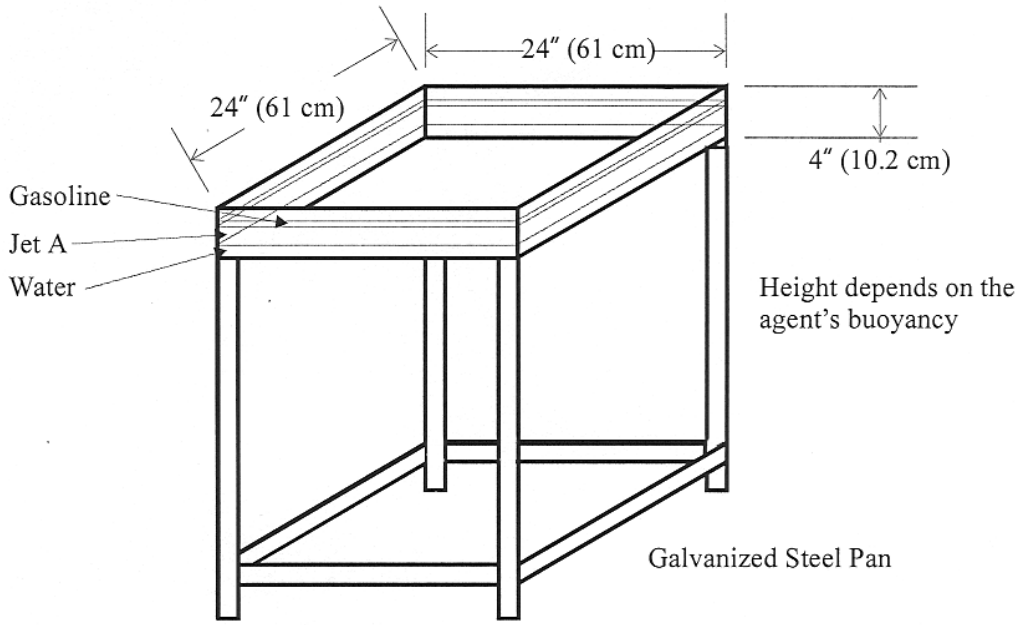

FIGURE 7. SURFACE-BURNING FIRE PAN

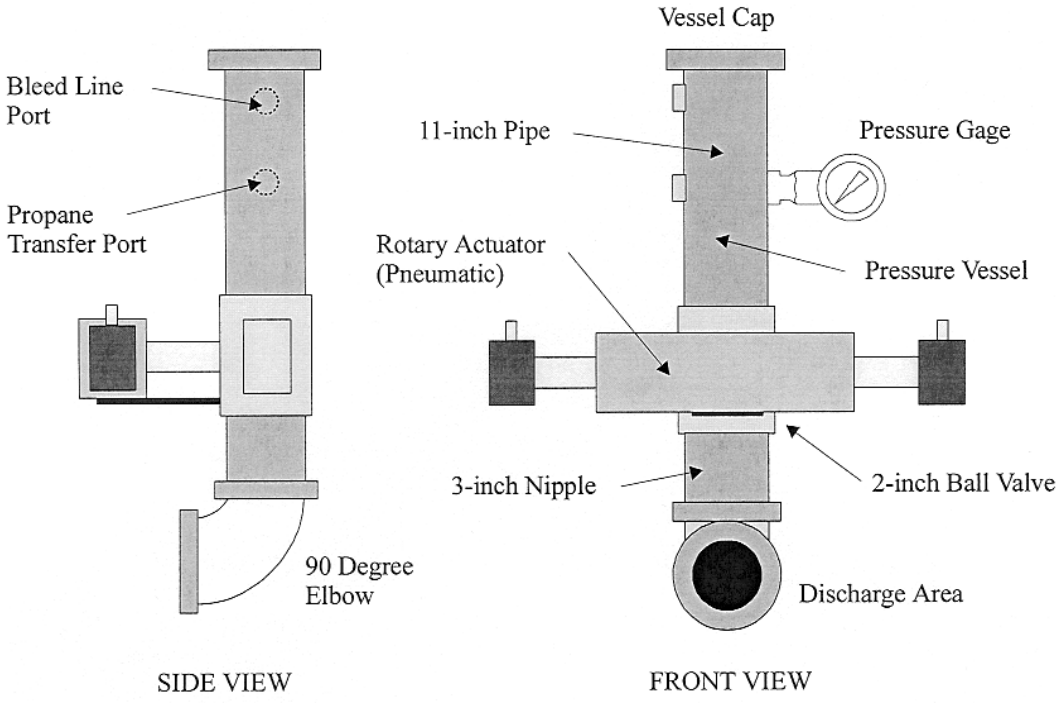

FIGURE 8. SCHEMATIC OF AEROSOL CAN EXPLOSION SIMULATOR

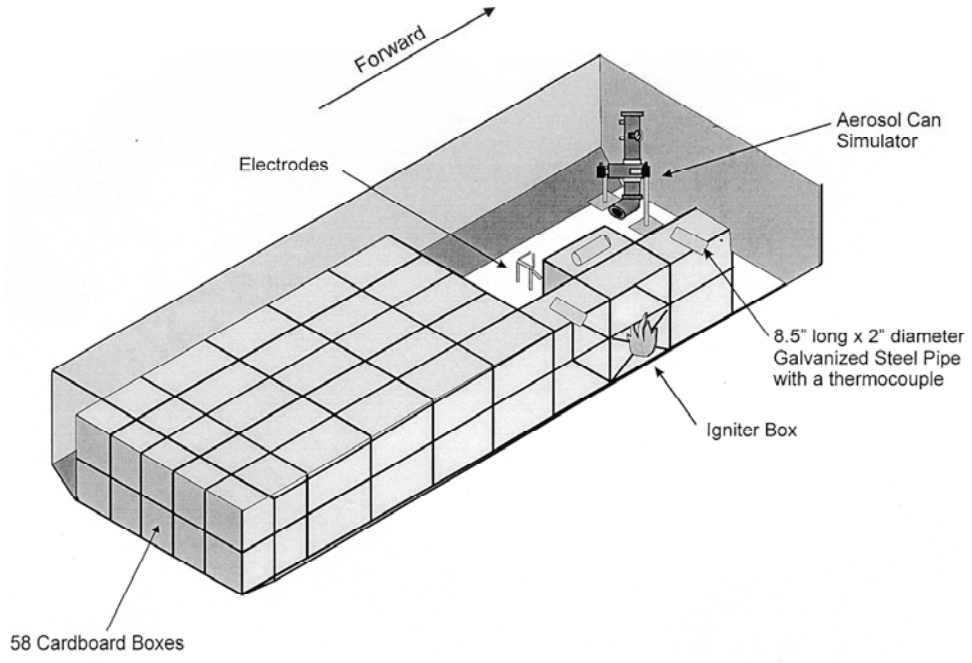

FIGURE 9. AEROSOL CAN EXPLOSION SIMULATION TEST SETUP

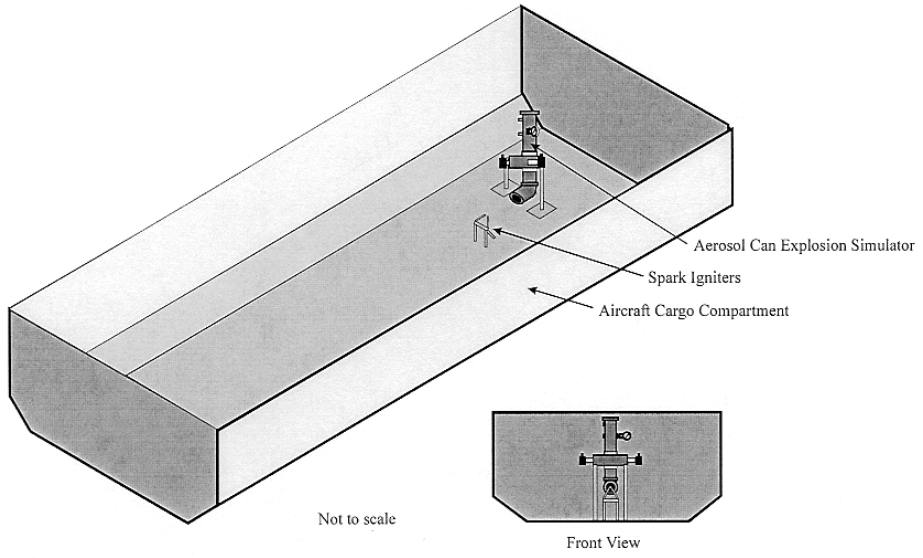

FIGURE 10. AEROSOL CAN EXPLOSION SIMULATION TEST SETUP (SHORT VERSION)

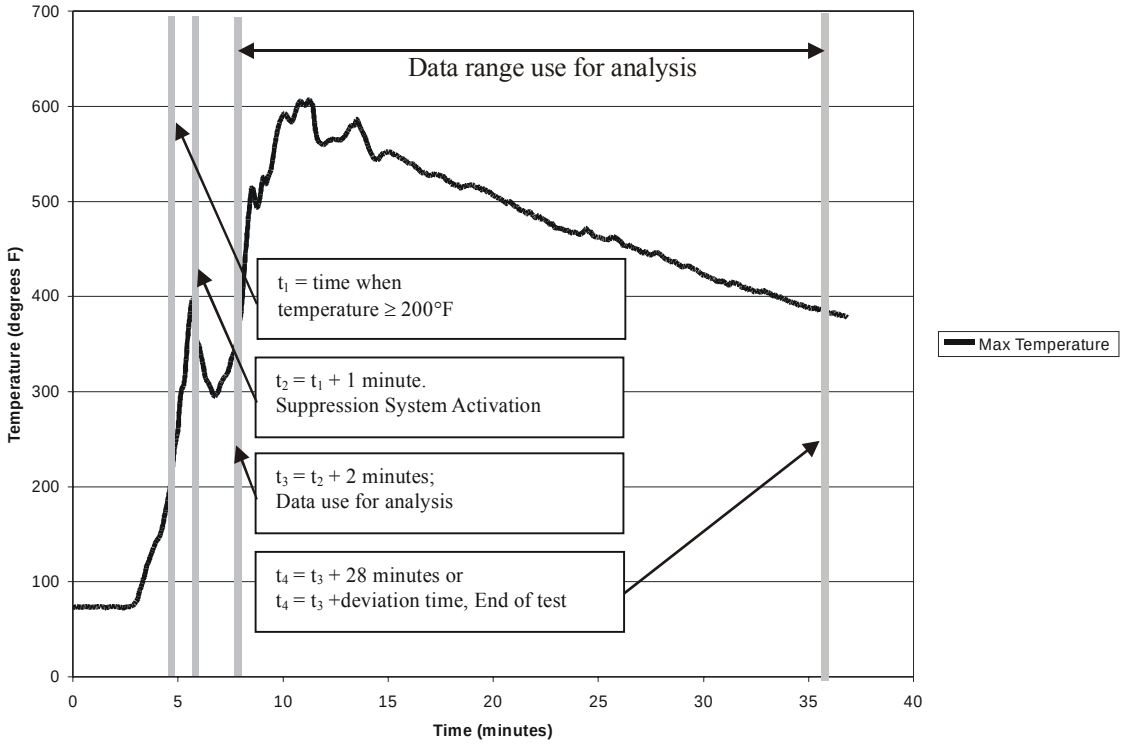

FIGURE 11. ACCEPTANCE CRITERIA BOUNDARIES

TABLE 1. ACCEPTANCE CRITERIA

Fire Scenario	Maximum Temp. °F (°C)	Maximum Pressure psi (kPa)	Maximum Temp-Time Area °F-min. (°C-min.)	Comments
Bulk Load	720 (382)	Not Applicable	9940 (5504)	Use the data that is between 2 and 28 minutes after suppression system activation. See figure 11.
Containerized Load	650 (343)	Not Applicable	14,040 (7,782)	Use the data that is between 2 and 28 minutes after suppression system activation. See figure 11.
Surface Fire	570 (299)	Not Applicable	1230 (665)	Use the data that is between 2 and 5 minutes after suppression system activation.
Aerosol Can Explosion Simulation	Not Applicable	0.0	Not Applicable	There shall be no evidence of an explosion. No enhancement of explosion at below inert concentrations.

APPENDIX A—DETERMINATION OF ACCEPTANCE CRITERIA VALUES

The following table contains the results of the MPS tests conducted with Halon 1301 as the fire suppression agent. The presented peak temperatures and peak areas were determined by using the data that falls between 2 and 28 minutes after the agent was discharged in the cargo compartment. The acceptance criteria values were determine by adding the maximum value attained during the five tests with the standard deviation of the data set and then rounded off.

Test	Test ID	Bulk-Load Test		Test ID	Containerized-Load Test		Test ID	Surface-Burning Test	
		Max. Temp. (ºF)	Max. Area (ºF-min)		Max. Temp (ºF)	Max. Area (ºF-min)		Max. Temp (ºF)	Max. Area (ºF-min)
1	081198T1	511	8002	082898T1	586	12845	111899T3	548	1184
2	081298T1	431	8906	083198T1	577	13029	111899T4	539	1195
3	081398T2	450	9097	090198T1	606	13136	111999T1	549	1203
4	081498T1	382	8938	090298T1	520	11967	111999T2	514	1147
5	081998T1	632	9453	090498T1	498	10996	111999T3	517	1153
6	082198T3	461	8733						
Standard Deviation		86.4	483.4		46.1	907.5		16.8	25.1
Maximum Value		632	9453		606	13136		549	1203
Sum of Std. Dev. + Max.		718.4	9936.4		652.1	14043.5		565.8	1228.1
ACCEPTANCE CRITERIA (ºF)		**720**	**9940**		**650**	**14040**		**570**	**1230**
ACCEPTANCE CRITERIA (ºC)		**382**	**5504**		**343**	**7782**		**299**	**665**

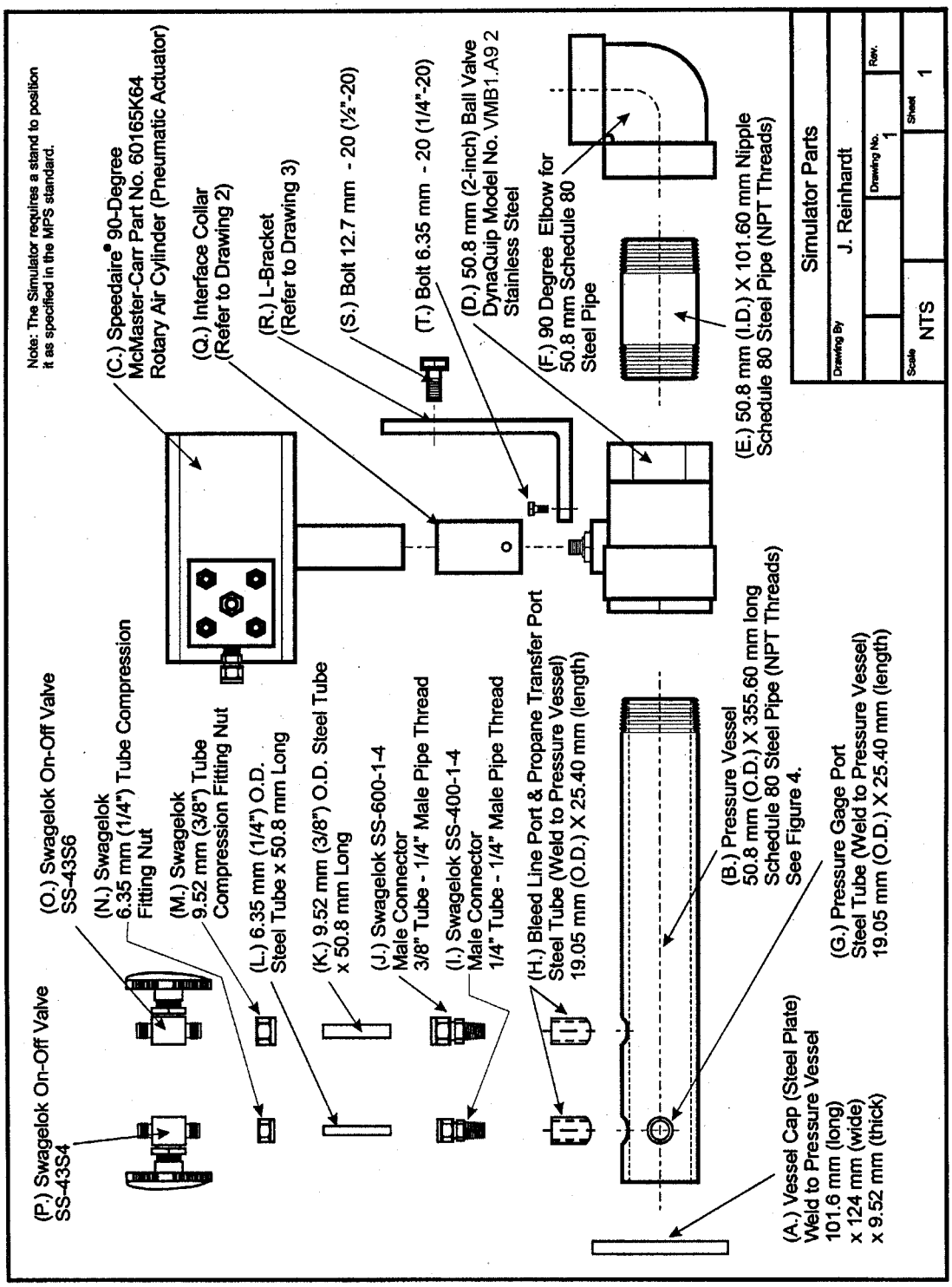

FIGURE B-1. AEROSOL CAN EXPLOSION SIMULATOR PARTS

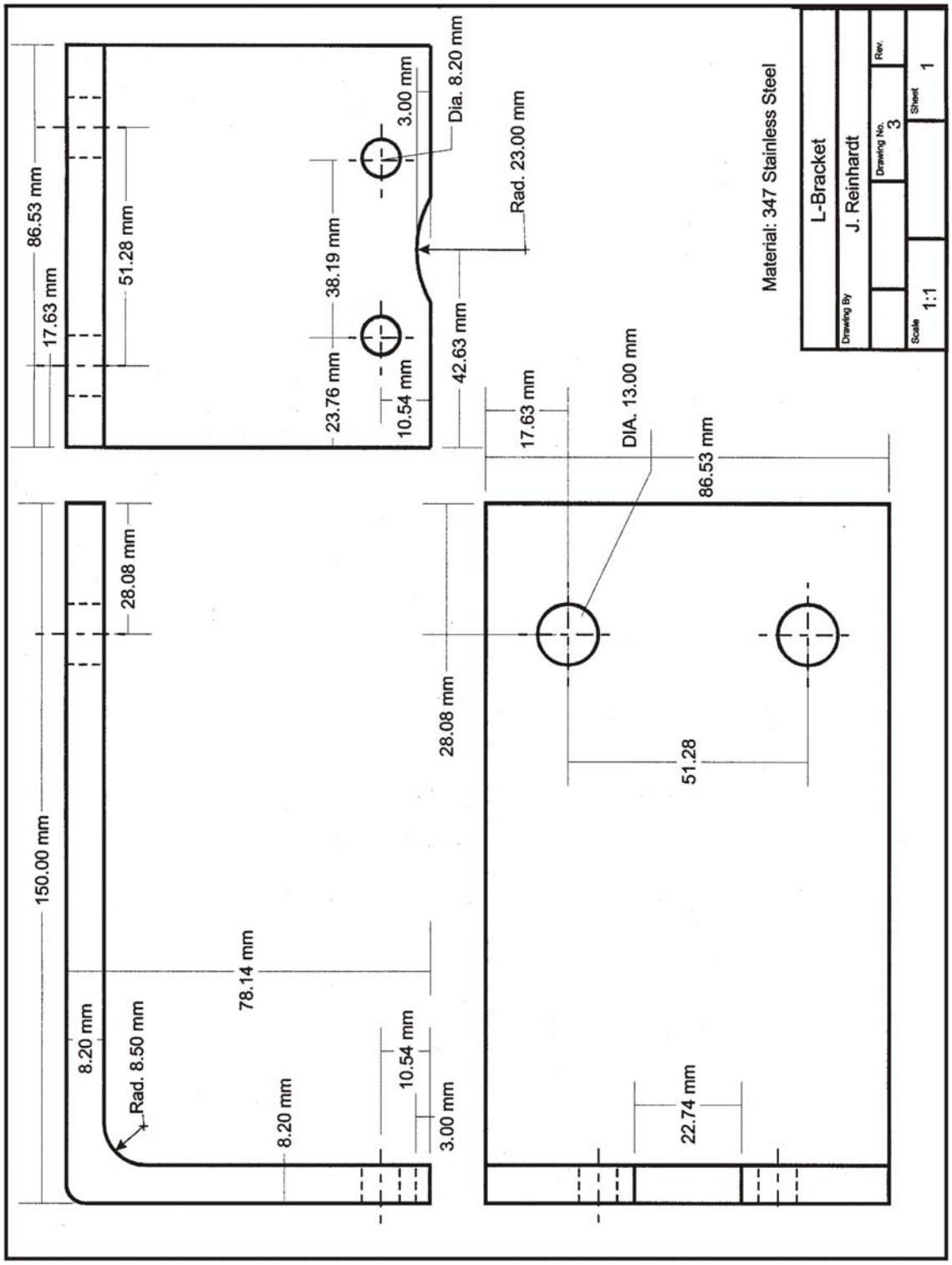

FIGURE B-2. L-BRACKET

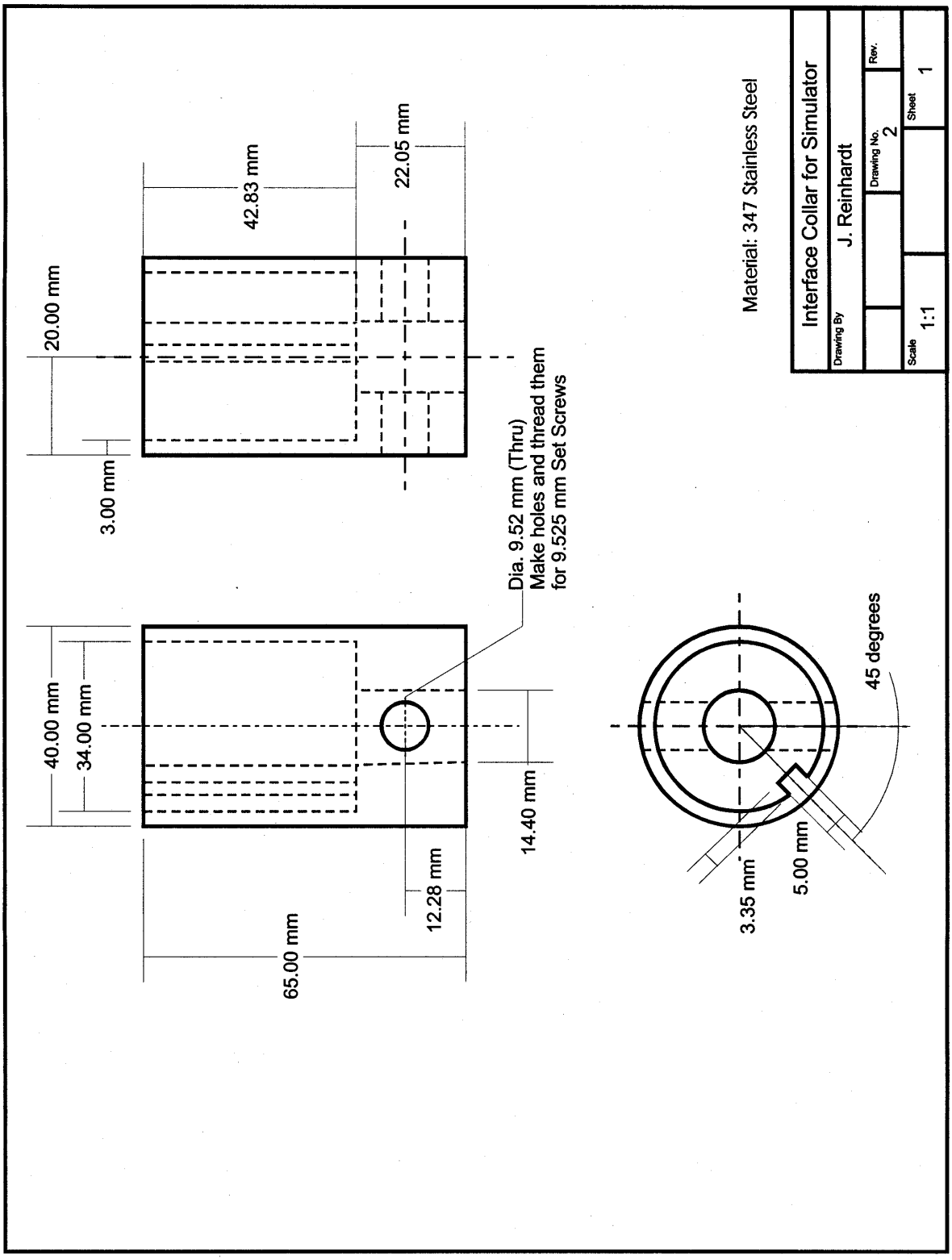

FIGURE B3. INTERFACE COLLAR FOR SIMULATOR