DOCKET NO. SA-228

EXHIBIT NO. 20H

NATIONAL TRANSPORTATION SAFETY BOARD

WASHINGTON, D.C.

ONBOARD INERT GAS GENERATION SYSTEM/ONBOARD OXYGEN GAS GENERATION SYSTEM (OBIGGS/OBOGS) STUDY
Part I: Aircraft System Requirements
(NASA/CR—2001-210903)

by

[Thomas L. Reynolds, Delbert B. Bailey, Daniel F. Lewinski, and Conrad M. Roseburg
Boeing Commercial Airplanes Group, Seattle, Washington]

NASA/CR—2001-210903 D950–10529–1

Onboard Inert Gas Generation System/ Onboard Oxygen Gas Generation System (OBIGGS/OBOGS) Study

Part I: Aircraft System Requirements

Thomas L. Reynolds, Delbert B. Bailey,
Daniel F. Lewinski, and Conrad M. Roseburg
Boeing Commercial Airplanes Group, Seattle, Washington

May 2001

The NASA STI Program Office . . . in Profile

Since its founding, NASA has been dedicated to the advancement of aeronautics and space science. The NASA Scientific and Technical Information (STI) Program Office plays a key part in helping NASA maintain this important role.

The NASA STI Program Office is operated by Langley Research Center, the Lead Center for NASA's scientific and technical information. The NASA STI Program Office provides access to the NASA STI Database, the largest collection of aeronautical and space science STI in the world. The Program Office is also NASA's institutional mechanism for disseminating the results of its research and development activities. These results are published by NASA in the NASA STI Report Series, which includes the following report types:

- TECHNICAL PUBLICATION. Reports of completed research or a major significant phase of research that present the results of NASA programs and include extensive data or theoretical analysis. Includes compilations of significant scientific and technical data and information deemed to be of continuing reference value. NASA's counterpart of peer-reviewed formal professional papers but has less stringent limitations on manuscript length and extent of graphic presentations.

- TECHNICAL MEMORANDUM. Scientific and technical findings that are preliminary or of specialized interest, e.g., quick release reports, working papers, and bibliographies that contain minimal annotation. Does not contain extensive analysis.

- CONTRACTOR REPORT. Scientific and technical findings by NASA-sponsored contractors and grantees.

- CONFERENCE PUBLICATION. Collected papers from scientific and technical conferences, symposia, seminars, or other meetings sponsored or cosponsored by NASA.

- SPECIAL PUBLICATION. Scientific, technical, or historical information from NASA programs, projects, and missions, often concerned with subjects having substantial public interest.

- TECHNICAL TRANSLATION. English-language translations of foreign scientific and technical material pertinent to NASA's mission.

Specialized services that complement the STI Program Office's diverse offerings include creating custom thesauri, building customized data bases, organizing and publishing research results . . . even providing videos.

For more information about the NASA STI Program Office, see the following:

- Access the NASA STI Program Home Page at ***http://www.sti.nasa.gov***

- E-mail your question via the Internet to help@sti.nasa.gov

- Fax your question to the NASA Access Help Desk at 301–621–0134

- Telephone the NASA Access Help Desk at 301–621–0390

- Write to:
  NASA Access Help Desk
  NASA Center for AeroSpace Information
  7121 Standard Drive
  Hanover, MD 21076

NASA/CR—2001-210903

D950–10529–1

Onboard Inert Gas Generation System/ Onboard Oxygen Gas Generation System (OBIGGS/OBOGS) Study

Part I: Aircraft System Requirements

Thomas L. Reynolds, Delbert B. Bailey,
Daniel F. Lewinski, and Conrad M. Roseburg
Boeing Commercial Airplanes Group, Seattle, Washington

Prepared under Contract NAS1–20341, Task Order 11

National Aeronautics and
Space Administration

Glenn Research Center

May 2001

Trade names or manufacturers' names are used in this report for identification only. This usage does not constitute an official endorsement, either expressed or implied, by the National Aeronautics and Space Administration.

Available from

NASA Center for Aerospace Information
7121 Standard Drive
Hanover, MD 21076

National Technical Information Service
5285 Port Royal Road
Springfield, VA 22100

Available electronically at http://gltrs.grc.nasa.gov/GLTRS

CONTENTS

Page

LIST OF FIGURES v
LIST OF TABLES ix
ACRONYMS AND ABBREVIATIONS xi
1.0 INTRODUCTION 1
1.1 Purpose 1
1.2 Background 1
1.3 Technical Approach 3
1.4 Task Assignment and Work Authorization 3
1.5 Aircraft Models Selected for Study 4
2.0 AIRPLANE REQUIREMENTS 9
2.1 Regulatory Issues and Requirements 9
2.2 Design Requirements 9
3.0 OXYGEN SYSTEMS 11
3.1 Crew Oxygen System Description 11
3.1.1 Crew Oxygen System Consumption 16
3.1.2 Crew Oxygen System Weight 18
3.2 Passenger Oxygen System Description 18
3.2.1 Chemical Supplemental Oxygen System 23
3.2.2 Gaseous Supplemental Oxygen System 25
3.2.3 Supplemental Oxygen Requirements 27
3.2.4 737 Oxygen Consumption Calculation 29
3.2.4.1 737 Oxygen System Weight 32
3.2.5 757 Oxygen Consumption Calculation 32
3.2.5.1 757 Oxygen System Weight 36
3.2.6 767 Oxygen Consumption Calculation 36
3.2.6.1 767 Oxygen System Weight 40
3.2.7 777 Oxygen Consumption Calculation 40
3.2.7.1 777 Oxygen System Weight 44
3.2.8 747 Oxygen Consumption Calculation 44
3.2.8.1 747 Oxygen System Weight 48
3.2.9 Oxygen Quality 48
4.0 FIRE SUPPRESSION SYSTEMS 51
4.1 Cargo Compartment Fire Suppression Systems 51
4.1.1 Introduction 51
4.1.2 Scope 51
4.1.3 Design Overview 52
4.1.3.1 Cargo Smoke Detection Systems 54
4.1.3.2 Flight Deck Procedures for Cargo Fire 56
4.1.3.3 Cargo Fire Extinguishing Systems 58
4.1.3.4 Cargo Compartment Physical Parameters and Fire Hardening 66
4.1.3.5 Component Qualifications 69
4.1.3.6 System Certification 73

4.1.3.7 FAR Requirements 74
4.1.3.8 Airworthiness Directives 74
4.1.3.9 Advisory Circulars 75
4.1.4 Historical Development of Cargo Fire Protection Systems 76
4.1.5 Published Industry and FAA Cargo Fire Test Reports and Documents 80
4.1.6 Nitrogen Cargo Fire Suppression Analysis 84
4.1.6.1 Nitrogen Knockdown With OBIGGS Inerting 86
4.1.6.2 Hybrid of Non-Nitrogen Knockdown With OBIGGS Inerting 95
4.2 Electronic Equipment Bay Fire Protection 102
4.3 Lavatory Extinguishing System Bottles 103
4.4 Portable Hand-Held Extinguishers 104
5.0 FUEL SYSTEM, PROPULSION FIRE PROTECTION, AND FUEL TANK INERTING REQUIREMENTS 105
5.1 Introduction 105
5.1.1 Scope 106
5.2 Fire Protection Systems: General Requirements 107
5.2.1 Typical Aircraft Safety Zones 107
5.2.2 Fire Zones: Engine Nacelle and APU Bay 109
5.2.3 Flammable Leakage Zone: Fire Protection Requirements 109
5.2.4 Flammable Zone: Fuel Tanks 110
5.2.5 Conclusions From the Fuel Tank Harmonization Working Group 111
5.3. Fire Protection System Description: General 112
5.3.1 Engine Nacelle Description 112
5.3.2 APU Bay Description 123
5.4. Fuel Systems Description 124
5.5. Analysis 131
APPENDIX A: APPLICABLE FEDERAL AVIATION REGULATIONS AND ADVISORY CIRCULARS 135
REFERENCES 161
About the Authors 163

LIST OF FIGURES

Page

Figure 1.0-1. Interior Configuration for the 737-800 (189 - All Economy Class) 5

Figure 1.0-2. Interior Configuration for the 757-200 (235 - All Economy Class) 5

Figure 1.0-3. Interior Configuration for the 767-300 (191 - Three-Class Configuration) 6

Figure 1.0-4. Interior Configuration for the 777-300 (332 - Three-Class Configuration) 6

Figure 1.0-5. Interior Configuration for the 747-400 (372 - Three-Class Configuration) 7

Figure 3.0-1. Crew Oxygen System Schematic 12

Figure 3.0-2. Typical Oxygen Gas Storage Cylinder.....13

Figure 3.0-3. Typical Crew Oxygen Cylinder Installation 14

Figure 3.0-4. Flight Crew Quick-Donning Mask 15

Figure 3.0-5. Passenger Oxygen Mask 20

Figure 3.0-6. Aircraft Descent Profiles.....21

Figure 3.0-7. Oxygen System Schematic 22

Figure 3.0-8. Passenger Service Unit With Chemical Oxygen Generator 24

Figure 3.0-9. Typical Passenger Oxygen Cylinder Installation 26

Figure 3.0-10. 737-800 Oxygen Consumption Rates 31

Figure 3.0-11. 757-200 Oxygen Consumption Rates 35

Figure 3.0-12. 767-300 Oxygen Consumption Rates 39

Figure 3.0-13. 777-300 Oxygen Consumption Rates 43

Figure 3.0-14. 747-400 Oxygen Consumption Rates 47

Figure 3.0-15. Equivalent Altitudes.....50

Figure 4.0-1. 777 Airplane Lower Cargo Compartments 55

Figure 4.0-2. Representative 777 Flow-Through Cargo Smoke Detection System 55

Figure 4.0-3. Flight Deck Indication and Control of Cargo Fire Protection System.....56

Figure 4.0-4. 777 Cargo Fire Extinguishing System 58

Figure 4.0-5. Isometric 777 Cargo Compartment Fire Extinguishing System 59

Figure 4.0-6. Isometric 777 Cargo Fire Extinguishing System Bottle Installation.....60

Figure 4.0-7. 747-400 Lower Deck Cargo Compartment.....61
Figure 4.0-8. 747-400 Main Deck Cargo Compartment.....62
Figure 4.0-9. OBIGGS Cargo Fire Suppression System Schematic 88
Figure 4.0-10. Nitrogen Knockdown With OBIGGS Control Volume Model 89
Figure 4.0-11. Typical Total Nitrogen Fire Suppression Model.....90
Figure 4.0-12. Overall Nitrogen Fire Suppression System Requirements.....92
Figure 4.0-13. OBIGGS Control Volume Model (Non-Nitrogen Knockdown).....97
Figure 4.0-14. Typical Nitrogen Hybrid Fire Suppression System Model.....98
Figure 4.0-15. Typical E/E Bay (1).....102
Figure 4.0-16. Typical E/E Bay (2).....103
Figure 5.0-1. Fire Protection Zones (1).....108
Figure 5.0-2. Fire Protection Zones (2).....108
Figure 5.0-3. Fire Protection Outline.....113
Figure 5.0-4. Fire Protection Overview (1).....113
Figure 5.0-5. Fire Protection Overview (2).....114
Figure 5.0-6. Engine Fire and Overheat Detection 114
Figure 5.0-7. Engine Fire and Overheat Detection and Warning (1) 115
Figure 5.0-8. Engine Fire and Overheat Detection and Warning (2) 115
Figure 5.0-9. Engine Fire and Overheat Detection and Warning (3) 116
Figure 5.0-10. Engine Fire Extinguishing System (1).....116
Figure 5.0-11. Engine Fire Extinguishing.....117
Figure 5.0-12. Engine Fire Extinguisher 117
Figure 5.0-13. APU Fire Detection and Warning (1).....118
Figure 5.0-14. APU Fire Detection and Warning (2).....118
Figure 5.0-15. APU Fire Detection and Warning (3).....119
Figure 5.0-16. APU Fire Extinguishing (1) 119
Figure 5.0-17. APU Fire Extinguishing (2) 120

Figure 5.0-18. APU Fire Extinguishing (3) 120
Figure 5.0-19. Wing Duct Leak Detection 121
Figure 5.0-20. Wheel Well Fire and Duct Leak Detection (1) 121
Figure 5.0-21. Wheel Well Fire and Duct Leak Detection (2) 122
Figure 5.0-22. 747-400 Fuel System Performance 124
Figure 5.0-23. 747-400F Fuel Systems 125
Figure 5.0-24. 747-400 Fuel Tank Arrangement (1) 125
Figure 5.0-25. 747-400 Fuel Tank Arrangement (2) 126
Figure 5.0-26. 747-400 Fuel Tank Venting 126
Figure 5.0-27. Wing Surge Tank Flame Arrester 127
Figure 5.0-28. 747-400 Fuel Vent Float Valves 127
Figure 5.0-29. Center and Wing Tank FQIS Components 128
Figure 5.0-30. 747-400 Fueling System - General 128
Figure 5.0-31. 747-400 Fueling System – CWT and HST (1) 129
Figure 5.0-32. 747-400 Fueling System – CWT and HST (2) 129
Figure 5.0-33. 747-400 Fueling System – CWT and HST (3) 130
Figure 5.0-34. 747-400 Refueling Valves 130
Figure 5.0-35. 747-400 Engine Fuel Feed System 131
Figure 5.0-36. Ullage Oxygen Versus OBIGGS Volume Added 132

LIST OF TABLES

Page

Table 3.0-1. Crew Oxygen System Weights for Study Aircraft 18

Table 3.0-2. Minimum Oxygen Required at Cabin Altitude 28

Table 3.0-3. 737-800 Oxygen Consumption Rate Calculations 30

Table 3.0-4. 757-200 Oxygen Consumption Rate Calculations 34

Table 3.0-5. 767-300 Oxygen Consumption Rate Calculations 38

Table 3.0-6. 777-300 Oxygen Consumption Rate Calculations 42

Table 3.0-7. 747-400 Oxygen Consumption Rate Calculations 46

Table 4.0-1. Cargo Compartment Classifications 53

Table 4.0-2. Cargo Fire Extinguishing Performance by Airplane Model 64

Table 4.0-3. Cargo Compartment Physical Parameters by Airplane Model (sheet 1 of 2) 67

Table 4.0-3. Cargo Compartment Physical Parameters by Airplane Model (sheet 2 of 2) 68

Table 4.0-4. Operational and Nonoperational Environmental Temperature Limits 71

Table 4.0-5. Operational Pressure Altitude Limits 71

Table 4.0-6. Nitrogen Knockdown and 95% OBIGGS Analysis 93

Table 4.0-7. Nitrogen Knockdown and 98% OBIGGS Analysis 94

Table 4.0-8. OBIGGS Hybrid and 84% Nitrogen Fire Suppression 99

Table 4.0-9. OBIGGS Hybrid and 88% Nitrogen Fire Suppression 100

Table 4.0-10. OBIGGS Hybrid and 91% Nitrogen Fire Suppression 101

Table 5.0-1. Partial Summary of Fuel Tank Protection Systems on Military Aircraft 106

Table 5.0-2. Weights For Engine Nacelle Fire Extinguishing Systems 123

Table 5.0-3. Weights for APU Bay Fire Extinguishing Systems 123

ACRONYMS AND ABBREVIATIONS

AC	advisory circulars
AD	Airworthiness Directive
APU	auxiliary power unit
ARAC	Aviation Rulemaking Advisory Committee
BIT	built-in test
CAR	Civil Air Regulations
CO_2	carbon dioxide
CWT	center wing fuel tanks
DOT	Department of Transportation
DR&O	design requirements and objectives
E/E	Electronic equipment
EICAS	engine indicating and crew alerting system
ETOPS	extended-range twin-engine operations
FAA	Federal Aviation Administration
FAR	Federal Aviation Regulation
FCU	flow control unit
FHA	functional hazard assessment
FMEA	failure modes and effects analysis
FMRC	Factory Mutual Research Corporation
FTHWG	Fuel Tank Harmonization Working Group
FQIS	Fuel Quantity Indicating System
Halon 1211	bromochlorodifluoromethane
Halon 1301	bromotrifluoromethane
HEI	high energy incendiary
HST	Horizontal Stabilizer Tank
IHRWG	International Halon Replacement Working Group
JAA	Joint Aviation Authorities
JAR	Joint Aviation Requirement
LN_2	liquid nitrogen
NASA	National Aeronautics and Space Administration
NSA	numerical safety analysis
NTPD	normal temperature pressure dry
NTSB	National Transportation and Safety Board
O_2	oxygen

OBIGGS	Onboard Inert Gas Generating System
OBOGS	Onboard Oxygen Generating System
PSU	personal service unit
s	standard
SAE	Society of Automotive Engineers
SCD	specification control drawings
STP	standard temperature and pressure
TALON	Total Atmospheric Liquefaction of Oxygen and Nitrogen
TSO	Technical Standard Order

1.0 INTRODUCTION

1.1 Purpose

The purpose of this technology assessment is to define a multiphase research study program investigating Onboard Inert Gas Generation Systems (OBIGGS) and Onboard Oxygen Generation Systems (OBOGS) that would identify current airplane systems design and certification requirements (Subtask 1); explore state-of-the-art technology (Subtask 2); develop systems specifications (Subtask 3); and develop an initial system design (Subtask 4). If feasible, consideration may be given to the development of a prototype laboratory test system that could potentially be used in commercial transport aircraft (Subtask 5). These systems should be capable of providing inert nitrogen gas for improved fire cargo compartment fire suppression and fuel tank inerting and emergency oxygen for crew and passenger use.

Subtask 1 of this research study, presented herein, defines current production aircraft certification requirements and design objectives necessary to meet mandatory FAA certification requirements and Boeing design and performance specifications. These requirements will be utilized for baseline comparisons for subsequent OBIGGS/OBOGS application evaluations and assessments.

1.2 Background

Oxygen systems, as they are currently designed for use on commercial transport aircraft, include passenger oxygen for use in the event of a sudden loss of cabin pressure (provided by either compressed oxygen or solid chemical oxygen generators) and gaseous oxygen for use by the flight deck crew. There is also portable gaseous oxygen available for medical use and for protective breathing equipment. The use of oxygen on commercial aircraft, required by FAA regulations, does pose a potential fire safety hazard because of the extremely high gas combustion temperatures that can be produced by combustible materials burning in either a pure or oxygen-enriched air environment. This is true of any oxygen system in any environment. Passenger and crew oxygen requirements make up a significant part of this contract study.

In order to protect commercial passenger transport from the potential danger of in-flight fires, especially those that can ignite in inaccessible areas during flight (cargo compartments, engine nacelles, and APU bays), fire protection systems and design techniques have been developed to provide enhanced protection in all phases of aircraft operations. Present-day suppression systems rely on sealed cargo compartments and the use of Halon 1301 to extinguish fires. There are currently no mandated requirements for inerting any compartments or sections of a commercial airplane. Continued production of Halon has been banned by international agreement because of its damaging effect on the stratospheric ozone layer. The possibility of using an OBIGGS to provide an alternative means of fire protection for existing areas where Halon 1301 is currently used and inerting center wing tanks is a major part of this contract study.

Chemical interference with combustion (Halon) and decreasing oxygen concentration (inerting) are two different methods that can be employed for fire containment or prevention. Chemical interference is currently obtained by injecting Halon gas into a sealed compartment to lower the oxygen (air) concentration to inhibit combustion. Halon effects fires in two ways: (1) it lowers the oxygen concentration, and (2) lowers the combustion chemical reaction rate by combining with reactants. For long-duration protection, after initial “knockdown” applications of Halon 1301, additional Halon is metered into the compartment to suppress or extinguish fires by chemical reactions in the fire zone. This technique has proven to be highly effective against both open flame and deep-seated fires for lengthy periods of time. Inerting an air volume to preclude combustion can be accomplished by lowering the oxygen concentration by injecting an inert gas such as nitrogen or carbon dioxide (gases that will neither support nor sustain combustion) to the point whereby combustion cannot occur.

For the purpose of this contract study, two principle inerting applications were considered in each of the aircraft models selected: cargo compartments (forward, aft, and bulk) and center wing fuel tanks (CWT). In the latter application, CWT fuel inerting, the military has demonstrated that in both live gun fire and laboratory testing an ullage oxygen concentration of 9% or below will preclude catastrophic overpressures in fuel tanks and dry bays.

1.3 Technical Approach

A technology that has been developed for generating oxygen and nitrogen gas from air is gas separation. This can be accomplished by application of different technologies such as by the use of a permeable membrane or pressure swing adsorption or by air distillation columns. Gas separation devices can separate an incoming stream of air into two exit streams with the composition of one being nitrogen-enriched air (approximately 95% nitrogen and 5% oxygen) and the other being oxygen-enriched air. These devices are currently in use in commercial trucks and ships to transport fresh fruit and vegetables in a nitrogen gas atmosphere to preserve freshness and for a longer storage life.

There are some military aircraft that employ gas membranes for the generation of nitrogen for fuel tank inerting and dry bays for fire and explosion protection and oxygen for crew breathing. The aircraft nomenclatures for these systems are: Onboard Inert Gas Generation System (OBIGGS) and Onboard Oxygen Generation System (OBOGS).

There are newer technologies in development that utilize distillation columns and cryogenic coolers to generate and store both liquid nitrogen and oxygen to meet the requirements for inerting and passenger and crew breathing. One such system now in development is called TALON, an acronym for total atmospheric liquefaction of oxygen and nitrogen. This type of system is capable of providing 99% pure oxygen and >96% pure nitrogen.

Chemical generation of inert or oxygen gases is quite common as evidenced by onboard chemical oxygen generators in passenger aircraft, quick response automotive airbags, and special nitrogen generators used for dry bay fire protection on some military aircraft and helicopters. These are pyrotechnic devices that are squib activated to produce chemical reactions that generate the desired gases. These types of systems can be activated or deployed virtually instantaneously. As an example, automotive airbags are inflated by chemical gas generators.

1.4 Task Assignment and Work Authorization

The authorization for Subtask 1 of this contract study was provided by NASA Contract NAS1-20341, Task Assignment No. 11, Work Order 92M42, document

reference number 126 (NAS1-20341/SDE), dated June 7, 1999. The period of performance was stated to be June 15–December 15, 1999 and later revised to June 15–June 30, 2000, with an escalation in costs. The total contract cost was $385,687 (cost plus no fees).

1.5 Aircraft Models Selected for Study

This study used one configuration of each model of the Boeing family of aircraft in current production: the single-aisle 737-800 (fig. 1.0-1) and 757-200 (fig. 1.0-2) and the twin-aisle 767-300 (fig. 1.0-3), 777-300 (fig. 1.0-4), and 747-400 (fig. 1.0-5). In addition, the 747-400 Combi was included because of its unique requirements for accommodating both main deck cargo and passengers.

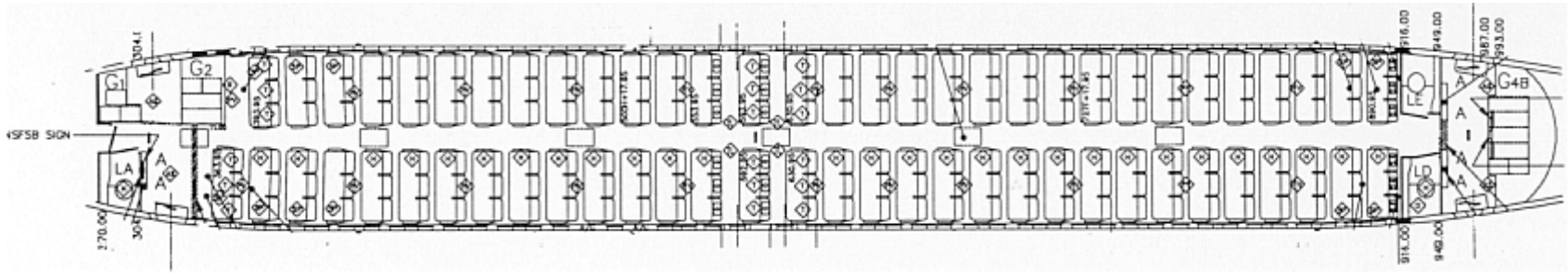

Figure 1.0-1. Interior Configuration for the 737-800 (189 - All Economy Class)

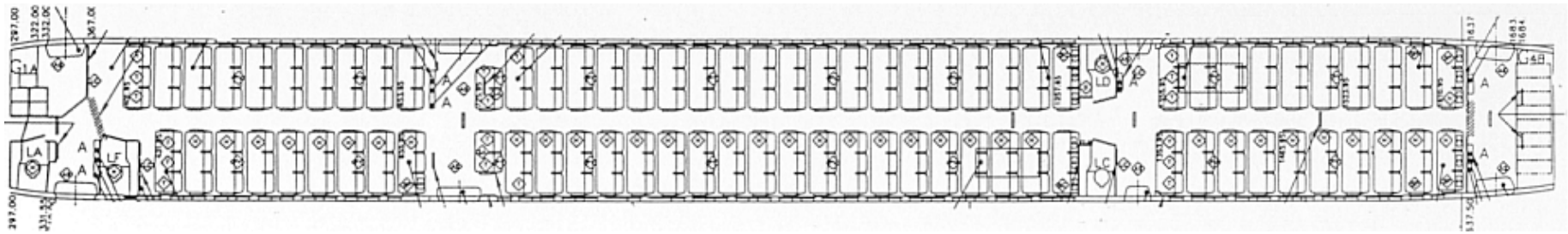

Figure 1.0-2. Interior Configuration for the 757-200 (235 - All Economy Class)

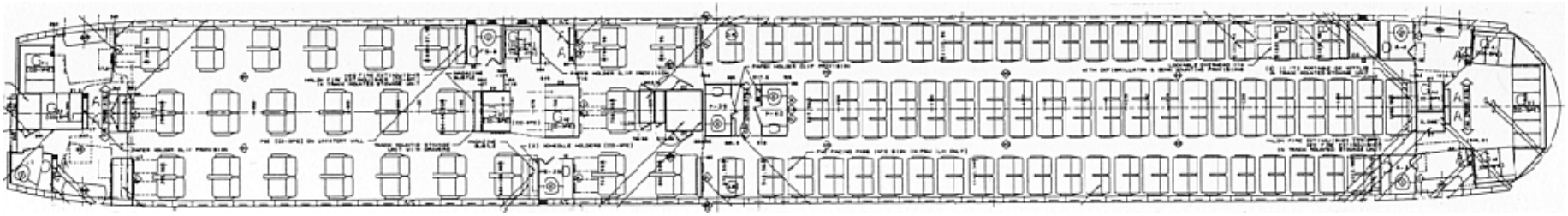

Figure 1.0-3. Interior Configuration for the 767-300 (191 - Three-Class Configuration)

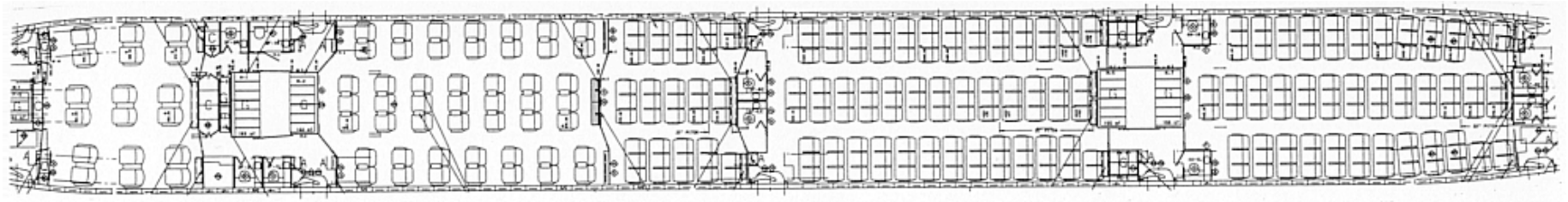

Figure 1.0-4. Interior Configuration for the 777-300 (332 - Three-Class Configuration)

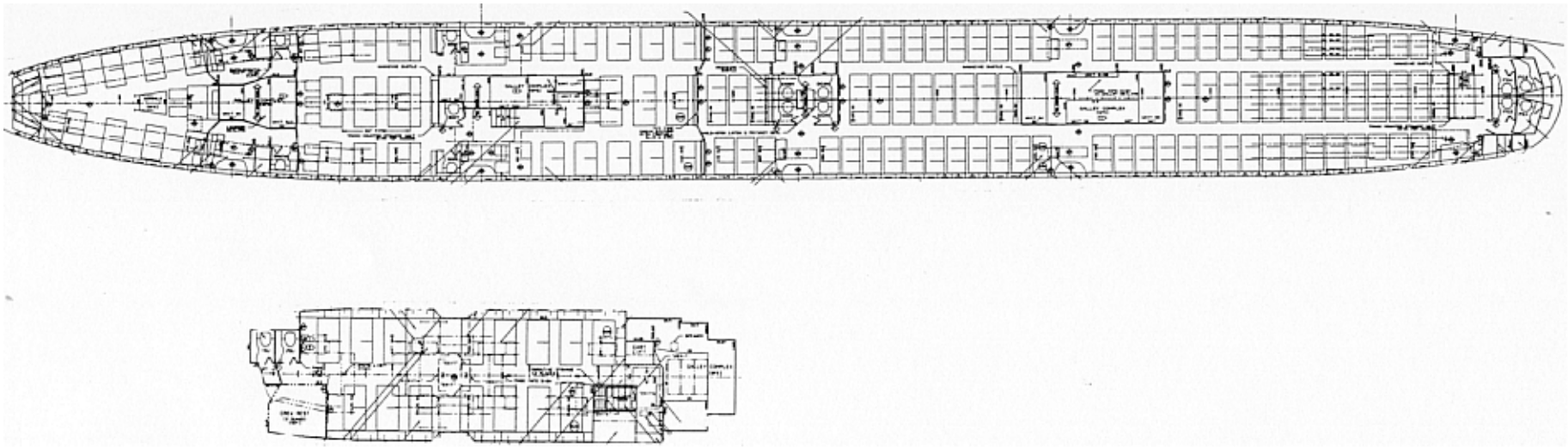

Figure 1.0-5. Interior Configuration for the 747-400 (372 - Three-Class Configuration)

2.0 AIRPLANE REQUIREMENTS

2.1 Regulatory Issues and Requirements

Common Federal Aviation Regulations (FAR), etc

Unique FARs, etc

Appendix A contains applicable Federal Aviation Regulations and advisory circulars.

2.2 Design Requirements

Unique Boeing requirements

Design Requirements Objectives (DR&O). This is a proprietary Boeing document that defines Boeing' requirements above and beyond those required by the FAA. The DR&O defines how structure will be designed, design allowables, installation and integration requirements, inspection, quality and performance. These requirements have been developed and honed over many years of building aircraft and are considered proprietary to our core business.

3.0 OXYGEN SYSTEMS

3.1 Crew Oxygen System Description

Crew oxygen systems provide supplemental oxygen to the flight deck to protect the crew from hypoxia during a decompression event. Along with hypoxia protection, the crew system is designed to protect its users from smoke and toxic fumes in the event of a fire.

Gaseous oxygen is stored in large, 1,850-psi high-pressure cylinders located in the lower forward section of the aircraft. The pressure of the stored oxygen for the flight deck is reduced from 1,850 psi to 70 psi for use in the crew oxygen masks. Standard Boeing flight decks oxygen systems can accommodate up to one pilot, one co-pilot, and two observers for a total of four users in an emergency situation. Federal Aviation Regulations (FAR) and Joint Aviation Requirements (JAR) require pressure of the storage cylinder be monitored at all times to ensure there is a sufficient quantity of oxygen available to the pilots for the given flight profile that is being flown. This is accomplished by having the pressure in the cylinder displayed on the flight deck. Figure 3.0-1 shows the schematic of the crew oxygen system. This schematic and the information provided in this section on the crew oxygen system are common across all Boeing commercial jet transport aircraft.

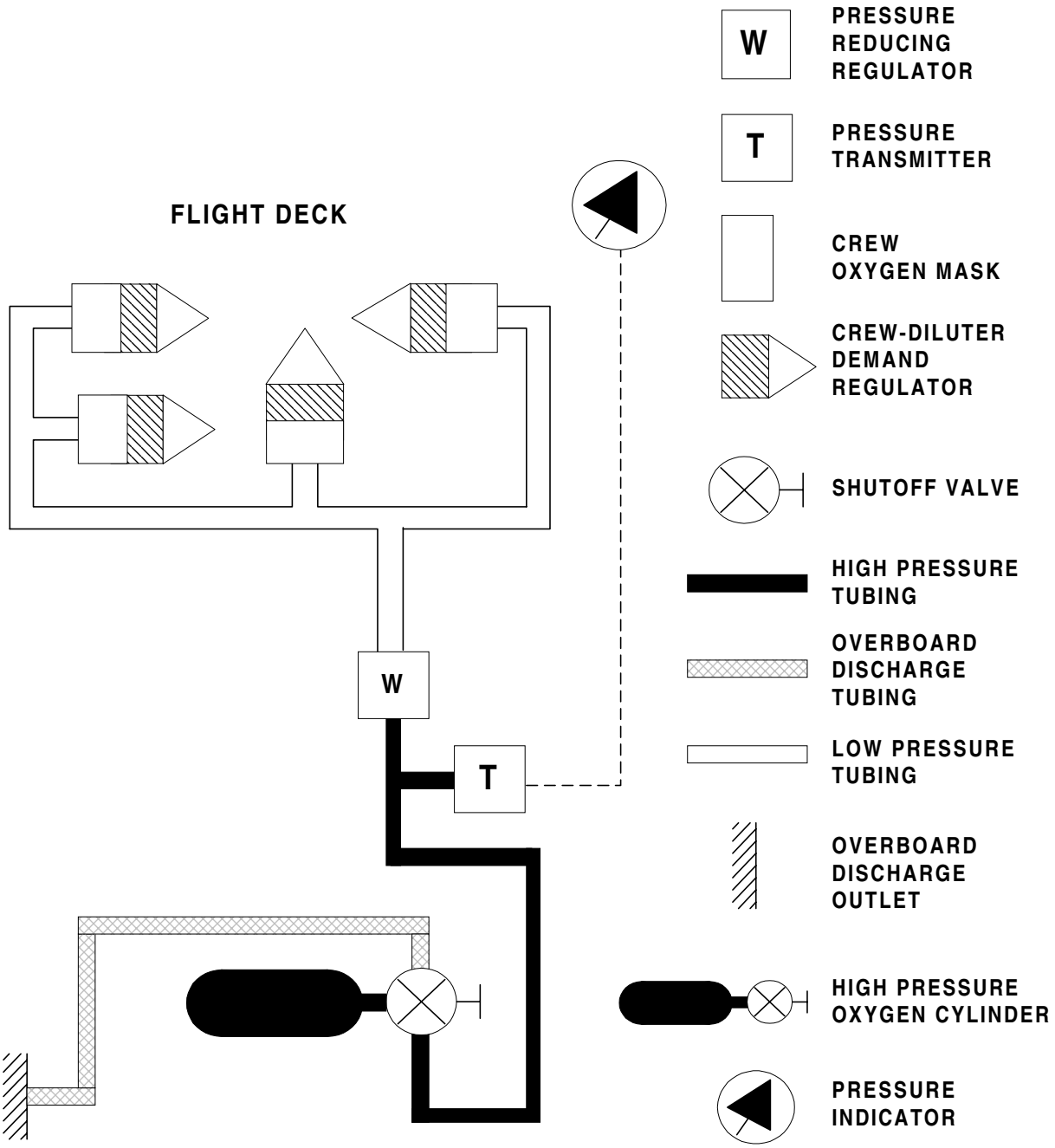

Figure 3.0-1. Crew Oxygen System Schematic

The high-pressure storage cylinders are available in several different sizes but the most common capacity is 3,200 L of usable oxygen. These cylinders are manufactured using drawn steel or can be assembled using KEVLAR® or graphite composite materials. These cylinders are classified by Department of Transportation (DOT) as 3Ht and require hydrostatic testing every 3 yr to ensure structural integrity. Figure 3.0-2 shows a typical oxygen gas storage cylinder.

Oxygen cylinders are initially charged to 1,850 psi. Through pilot usage and system leakage the pressure decreases over time. Depending on the intended flight profile, there is a minimum pressure that must be maintained for safe operation.

An additional cylinder can be added to satisfy flight requirements or the desire to lengthen service intervals of the oxygen system. The penalty for this added weight and loss of space can be justified through operational savings of cost and time. Figure 3.0-3 shows the typical crew oxygen cylinder installation.

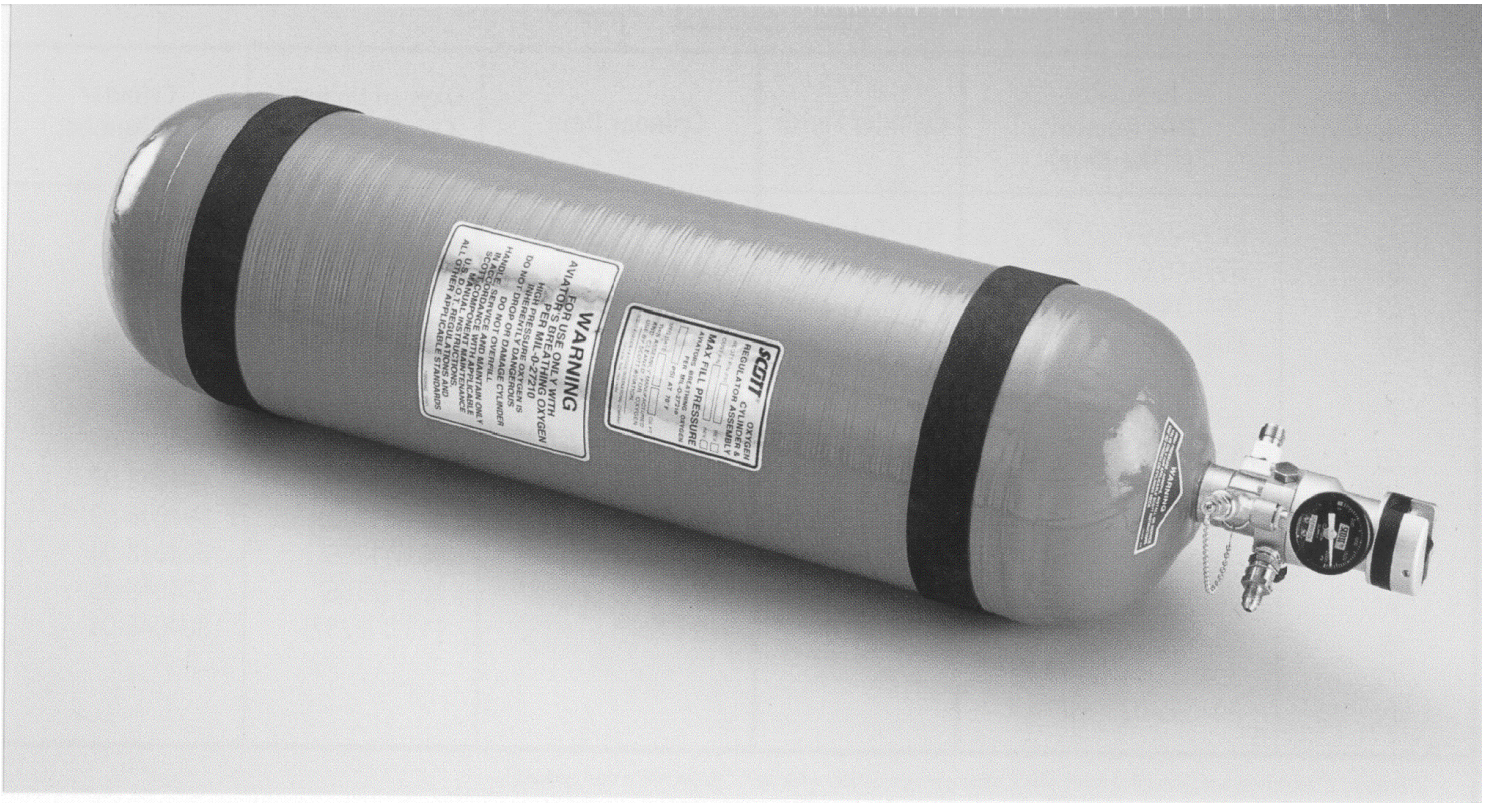

Figure 3.0-2. Typical Oxygen Gas Storage Cylinder

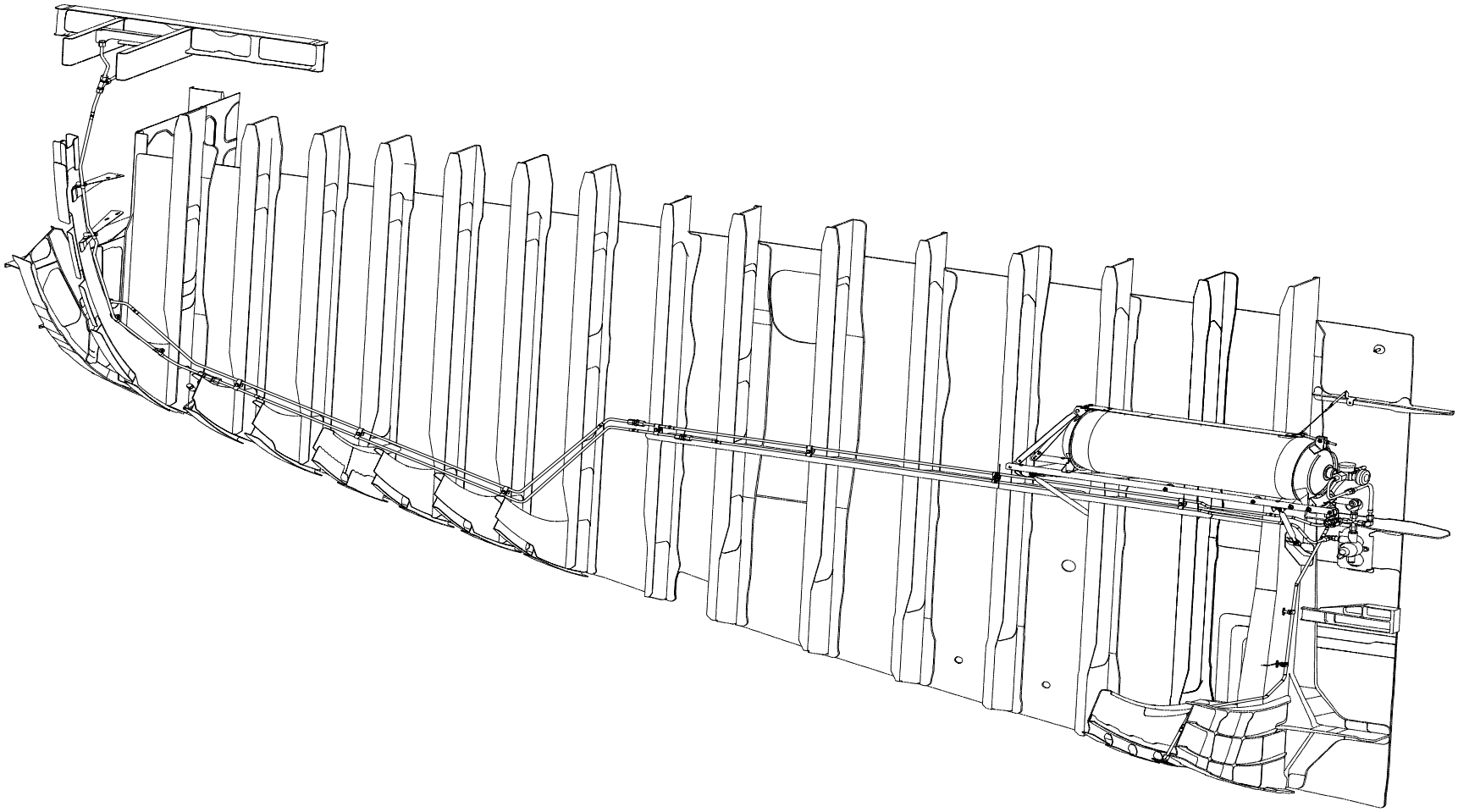

Figure 3.0-3. Typical Crew Oxygen Cylinder Installation

The crew oxygen masks are of a quick-donning design that have two primary functions. They provide supplemental oxygen to the user in the event of aircraft decompression and protect the user from smoke and toxic fumes that may result from a fire. Figure 3.0-4 shows a typical flight crew quick-donning type mask.

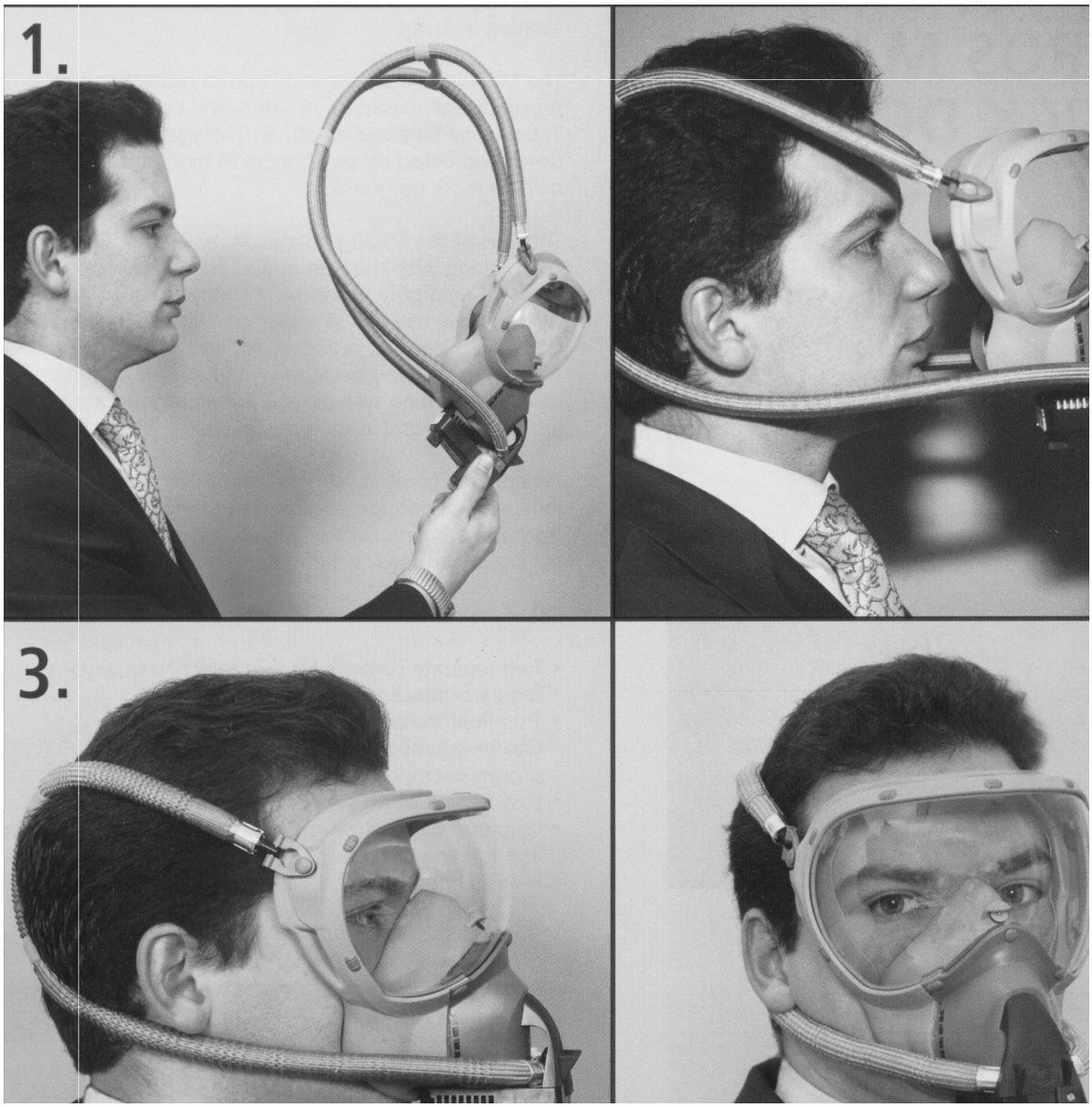

Figure 3.0-4. Flight Crew Quick-Donning Mask

The crew masks have three protection settings that the user can select. The settings are Normal, 100%, and Emergency. The performance for each setting is defined by

FAA Technical Standard Orders (TSO) C78 and C89. The Normal setting allows the mask to perform as a diluter-demand type mask. This setting mixes ambient air with 100% oxygen to provide hypoxia protection. The mask regulator automatically adjusts the quantity of oxygen to be mixed depending on cabin altitude. This setting is the most commonly used because it provides sufficient hypoxia protection and conserves the supply of stored oxygen. It should be noted that this setting is used when pilots are required to use oxygen: when one pilot leaves the flight deck or when the aircraft is flying at an altitude above 41,000 ft.

The 100% mask setting provides 100% oxygen to the user and does not allow ambient air into the mask. This setting is the default setting when the mask is removed from the storage box. This setting provides the user protection from smoke and toxic fumes that may enter the flight deck. The quantity of oxygen supplied is automatically adjusted for cabin altitude. The 100% setting consumes significantly more oxygen than the Normal setting because all of the oxygen the user requires comes from the stored oxygen supply. This setting is used only during the first few minutes of an emergency descent after which time the user switches to the Normal setting.

The Emergency setting is manually selected only in the event that smoke or fumes enter the mask or goggles. This is a momentary setting that dispenses 100% oxygen at an increased pressure to purge the mask and goggles of any gaseous contamination.

3.1.1 Crew Oxygen System Consumption

The FAA and JAA require that protective oxygen be provided in the event of a decompression from maximum certified altitude down to 10,000 ft. The explanation for descent profile can be found in section 3.2, “Passenger Oxygen System Description.” However, this is not the primary factor for determining oxygen quantities required by the federal regulator agencies. For smoke and toxic fume protection, FAR/JAR 25.1439 require 15 min per crew member at a cabin pressure altitude of 8,000 ft. This equates to 300 L normal temperature pressure dry (NTPD) of usable oxygen when demand equipment is used. This is equivalent to an average

equipment performance rate of 300 L/15 min = 20 L/m NTPD. The total quantity of stored oxygen can then be calculated:

$$4 \text{ crewmembers} * 300 \text{ L per crewmember} = 1{,}200 \text{ L}$$

This illustrates that a minimum of 1,200 L of usable oxygen must be available during normal mission operations. In the event the supply of oxygen falls below this minimum level, the pilot is required to reassess the flight plan and take appropriate action. This value is the absolute minimum quantity required by the FAA and the Joint Aviation Authorities (JAA).

Minimum flight dispatch pressures of the oxygen supply must also be determined. This takes into consideration specific crew mask designs that may dispense more than the minimum quantities of oxygen, flight usage of oxygen, and the temperature of the stored oxygen. All of these factors have an impact on the quantity of oxygen that is available for use. The average rate at which oxygen is consumed is:

$$20 \text{ L/m} * 4 \text{ crewmembers} = 80 \text{ L/m}$$

What has been discussed so far is the minimum crew oxygen requirements for FAA/JAA certification of the aircraft. Another aspect that must be considered is the airline operational plan for the aircraft. Many twin-engine commercial jet aircraft today operate under extended-range twin-engine operations (ETOPS). This allows an aircraft that has experienced a decompression to remain at a altitude higher than 10,000 ft for greater aircraft performance. Under these conditions, pilots will require oxygen for greater lengths of time. The quantity of oxygen required depends on the altitude and the duration of time spent at that altitude. Terrain clearance is another operational condition in which an aircraft can not descend directly to 10,000 ft but must cruse at a higher altitude to clear high mountains. Often a second oxygen cylinder is added to provide sufficient quantities of oxygen to meet these operational requirements.

3.1.2 Crew Oxygen System Weight

Weights for typical crew oxygen systems are shown in table 3.0-1. The system weights shown consist of the oxygen cylinder, cylinder support hardware, regulators, valves, hoses, and tubing. It does not include the weight of the crew mask and stowage box located on the flight deck.

Table 3.0-1. Crew Oxygen System Weights For Study Aircraft

Aircraft Model	Weight, lb
737-800	55
757-200	57
767-300	55
777-300	42 (one cylinder) 77 (two cylinders)
747-400	60 (one cylinder) 110 (two cylinders)

3.2 Passenger Oxygen System Description

In the event of an aircraft decompression, supplemental oxygen is provided to passengers and flight attendants to protect them from the effects of hypoxia. The FAA and JAA require that the passenger oxygen system must activate before the aircraft cabin's altitude exceeds 15,000 ft and be capable of producing the required amount of oxygen in less than 10 sec. The passenger system is not designed to protect from smoke and toxic fumes, only hypoxia. The passenger mask must meet the requirements of TSO C64a. Figure 3.0-5 shows a typical passenger oxygen mask.

The supplemental oxygen system must provide passenger protection from the aircraft's maximum certified altitude to a cabin altitude of 10,000 ft. FAA/JAA 25.1441(d) limits commercial jet transport cabin altitude to less than 40,000 ft during a rapid decompression. For this reason, the system must survive altitudes up to and including the maximum certified altitude but its performance requirements start at a maximum cabin altitude of 40,000 ft down to 10,000 ft. Typical Boeing aircraft

descent profiles that would be flown in the event of a decompression are shown in figure 3.0-6.

The first curve portrays an aircraft flying a typical 12-min profile that provides for the minimum aircraft descent profile. This descent profile will clear most terrain obstacles in North America, South America, Europe, and Asia. It should be noted that the aircraft is capable of descending at a faster rate and from maximum certified altitude to below 10,000 ft than is shown by the 12-min curve. This is a fixed profile that is used for consistency across all Boeing models and can be used for the vast majority of city pairs that airlines currently fly.

The second curve shows a typical 22-min profile that is used to clear some mountainous terrain in South America and in Asia. It covers the majority of city pairs that airlines fly that can not be covered by the 12-min descent profile.

The third profile can be customized to meet severe terrain clearance conditions, typically over the Himalayan Mountains. The “hold at altitude” time depends greatly on the city pairs being flown and the availability of acceptable diversion airports in the event of a decompression emergency. Some of the longer routes may have total flight times that require oxygen for 70 min. These route structures are specific to customer operational requirements.

There are two types of passenger oxygen systems available for commercial jet transport. They are chemical generation systems and stored gaseous systems. Each will be described in detail later. Figure 3.0-7 shows the schematic for the two different types of oxygen systems. The 12- and 22-min profile curves shown in figure 3.0-6 usually have passenger oxygen systems that are of the chemical generation type. The third descent profile always uses a stored-gas type of passenger oxygen system to utilize its oxygen storage flexibility.

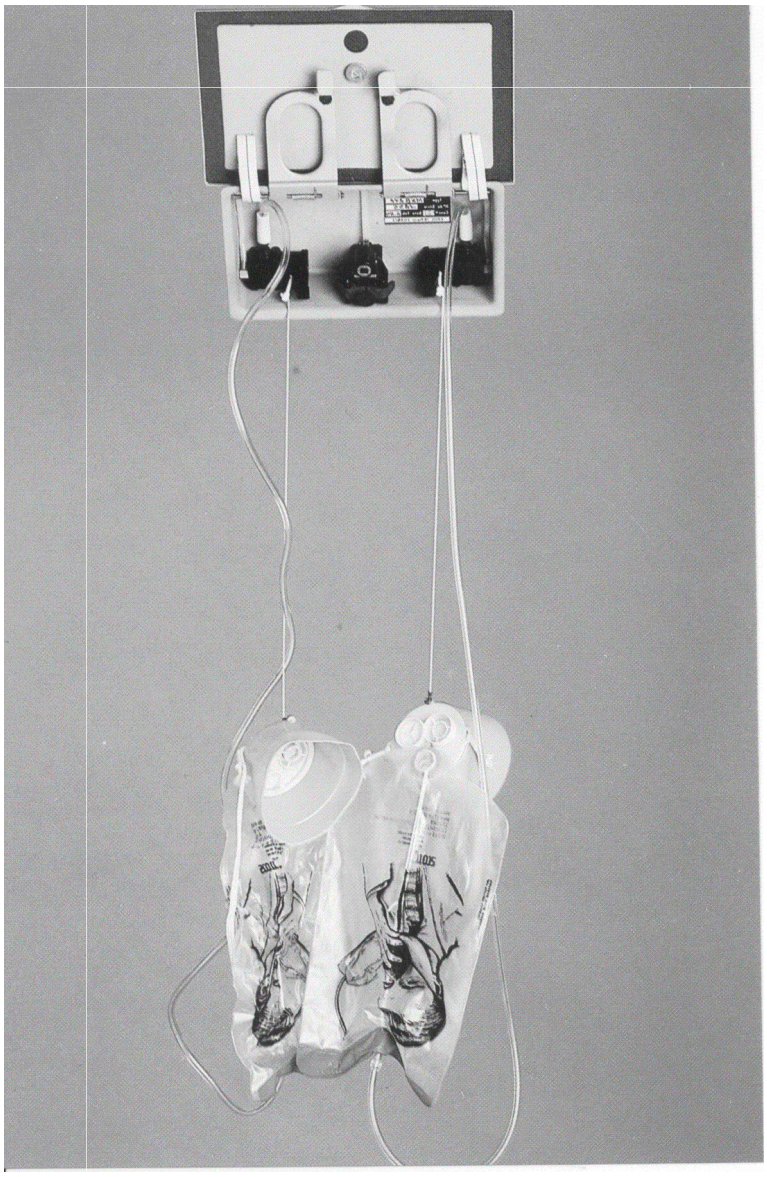

Figure 3.0-5. Passenger Oxygen Mask

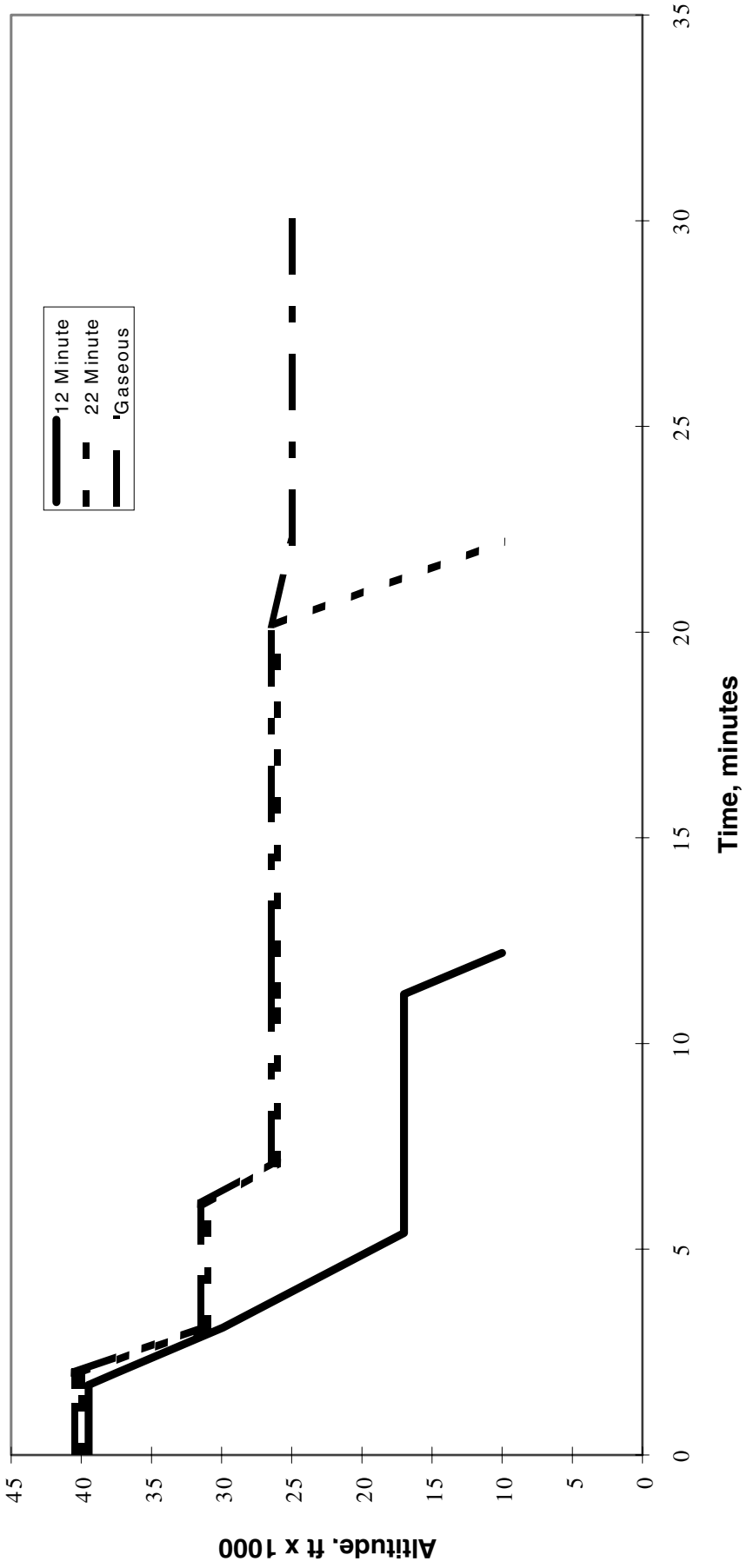

Figure 3.0-6. Aircraft Descent Profiles

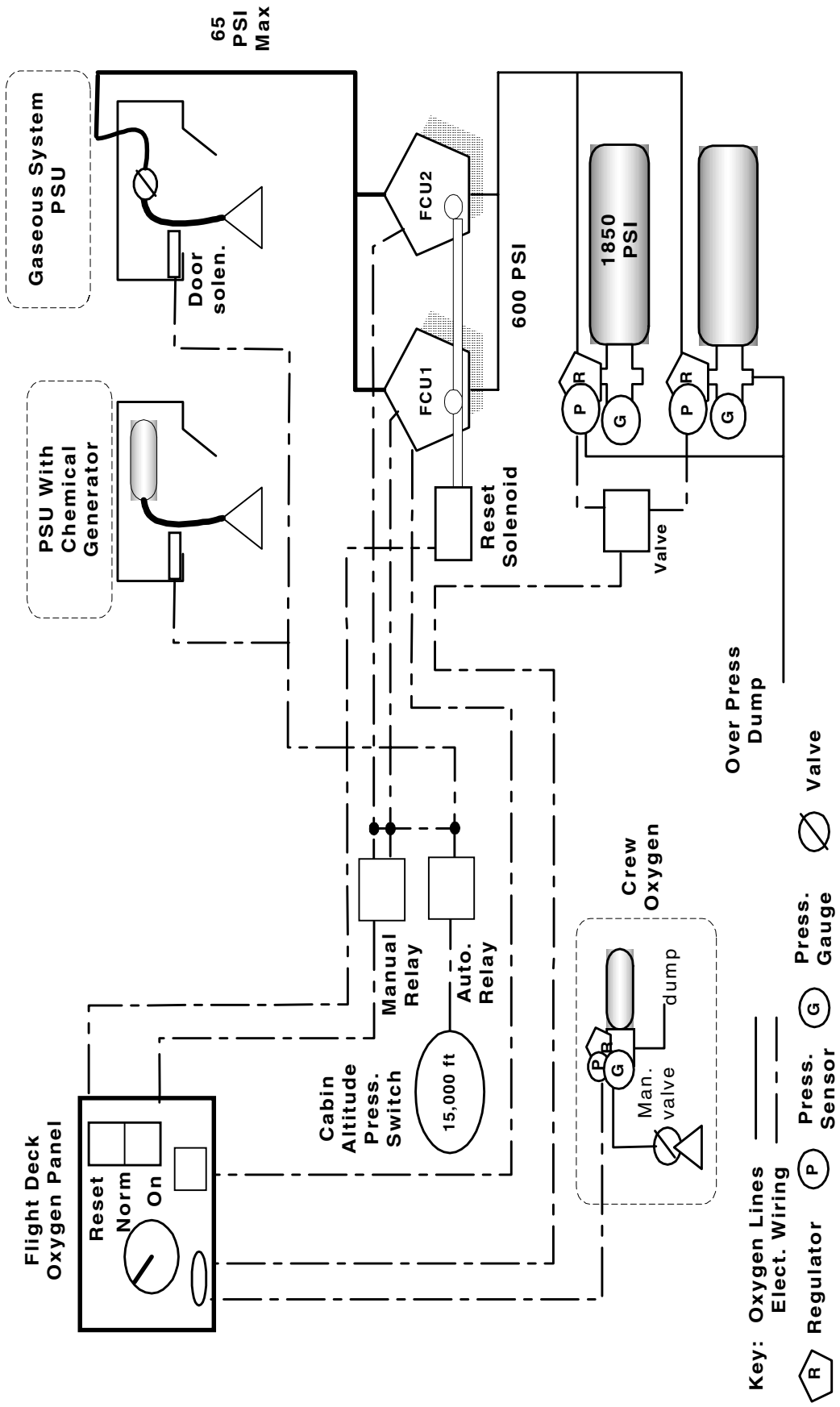

Figure 3.0-7. Oxygen System Schematic

3.2.1 Chemical Supplemental Oxygen System

In a chemical oxygen system, oxygen is stored in the form of chemicals that are inside a metal container called an oxygen chemical generator, which is installed in the overhead personal service unit (PSU). Figure 3.0-8 shows a PSU with a chemical generator installed. The oxygen generator starts producing 99.5% pure oxygen when the chemical reaction is initiated after the firing mechanism is activated. The firing mechanism is activated when mask is pulled by the user. Pulling the mask releases a safety pin that allows a pyrotechnic ignition of the chemicals inside the oxygen generator. Figure 3.0-5 shows the passenger masks hanging from lanyards that are connected to the safety pins.

Oxygen generators are designed to provide oxygen for two, three, four, or five people. The quantity and the mixture of chemical inside the generator are determined by the aircraft descent profile supported. For example, a chemical generator that will support a 12-min profile for four people will have a unique chemical mixture and size that will provide sufficient oxygen to meet FAA/JAA requirements. Once designed, its chemical makeup is fixed; thus, the amount of supplemental oxygen it produces is fixed. This generator would not be able to support other descent profiles unless the entire profile was beneath the 12-min profile curve for that generator. It should also be noted that the performance of the generator is independent of altitude. A generator's production of oxygen is time dependant only. Time starts when the firing mechanism is activated. If a different descent profile is required, a new oxygen generator must be designed and certified.

Although a chemical oxygen passenger system is limited in its descent profile flexibility, it has proved to be light weight, reliable, and cost effective for the vast majority of aircraft that can operate with a 12- or 22-min emergency descent profile.

If an airline requires additional route flexibility or more than 22-min of supplemental oxygen, a gaseous oxygen system is the only option.

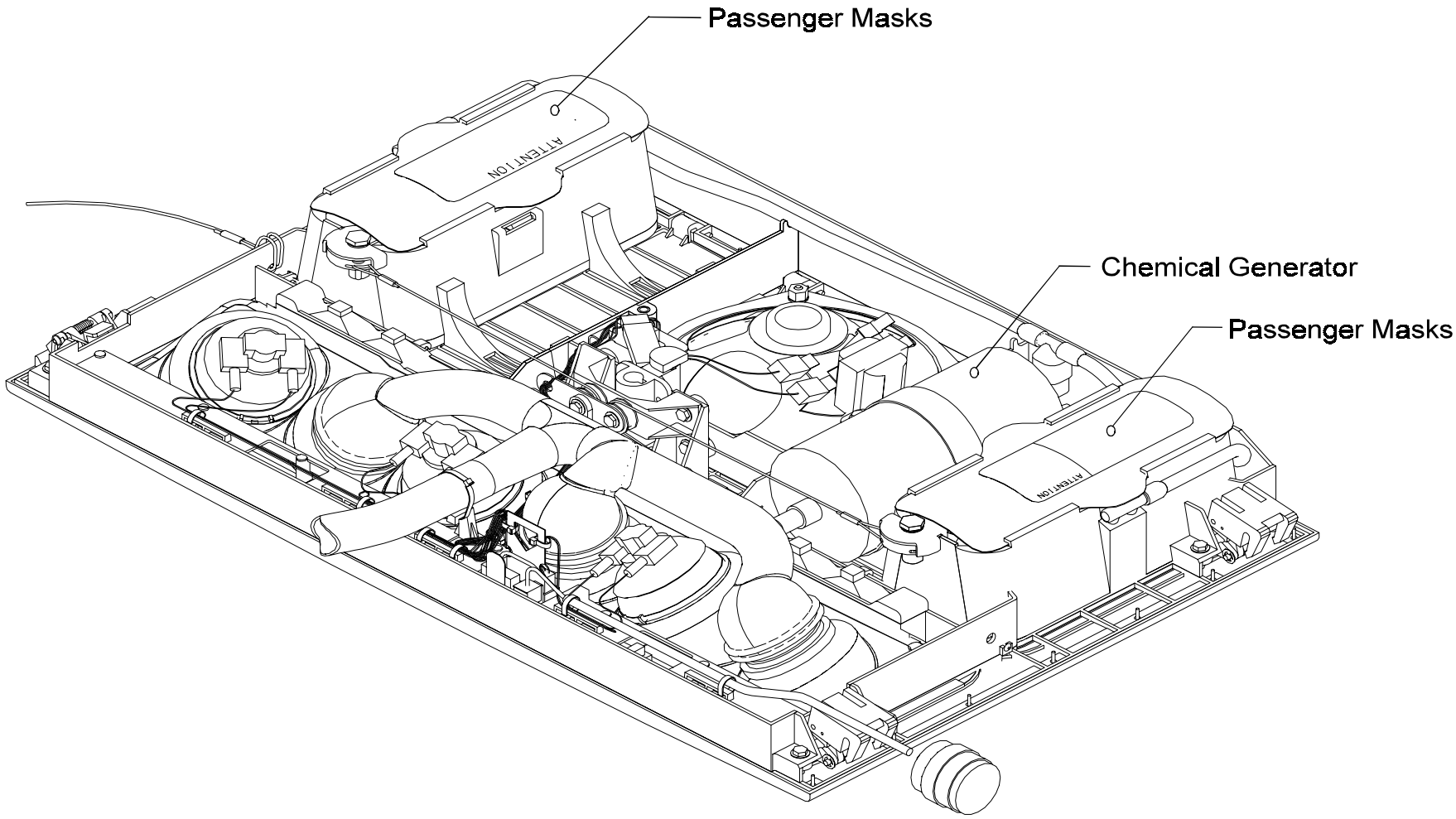

Figure 3.0-8. Passenger Service Unit With Chemical Oxygen Generator

3.2.2 Gaseous Supplemental Oxygen System

In a passenger gaseous oxygen system, gaseous oxygen is stored in 3,200-L cylinders at 1,850 psi. The cylinders are located in either the forward or aft lower compartments of the aircraft. Figure 3.0-9 shows a typical passenger oxygen cylinder installation. After passenger oxygen masks are deployed, a passenger can start the flow of oxygen by pulling the mask to his or her face. Figure 3.0-7 is a passenger system schematic. The quantity of supplemental oxygen delivered to each individual is metered by at least two flow control units (FCU) that automatically adjust system pressure depending on the cabin altitude. FCUs deliver the required amount of 100% oxygen to the passenger masks, which mix the oxygen with ambient air.

The greatest advantage of a gaseous system is its flexibility in accommodating different flight profiles and extending an aircraft's capabilities by simply adding cylinders. The cost and weight of stored oxygen may be higher than that of a chemical oxygen system but its flexibility to accommodate different descent profiles makes it the only practical option for some flight operations.

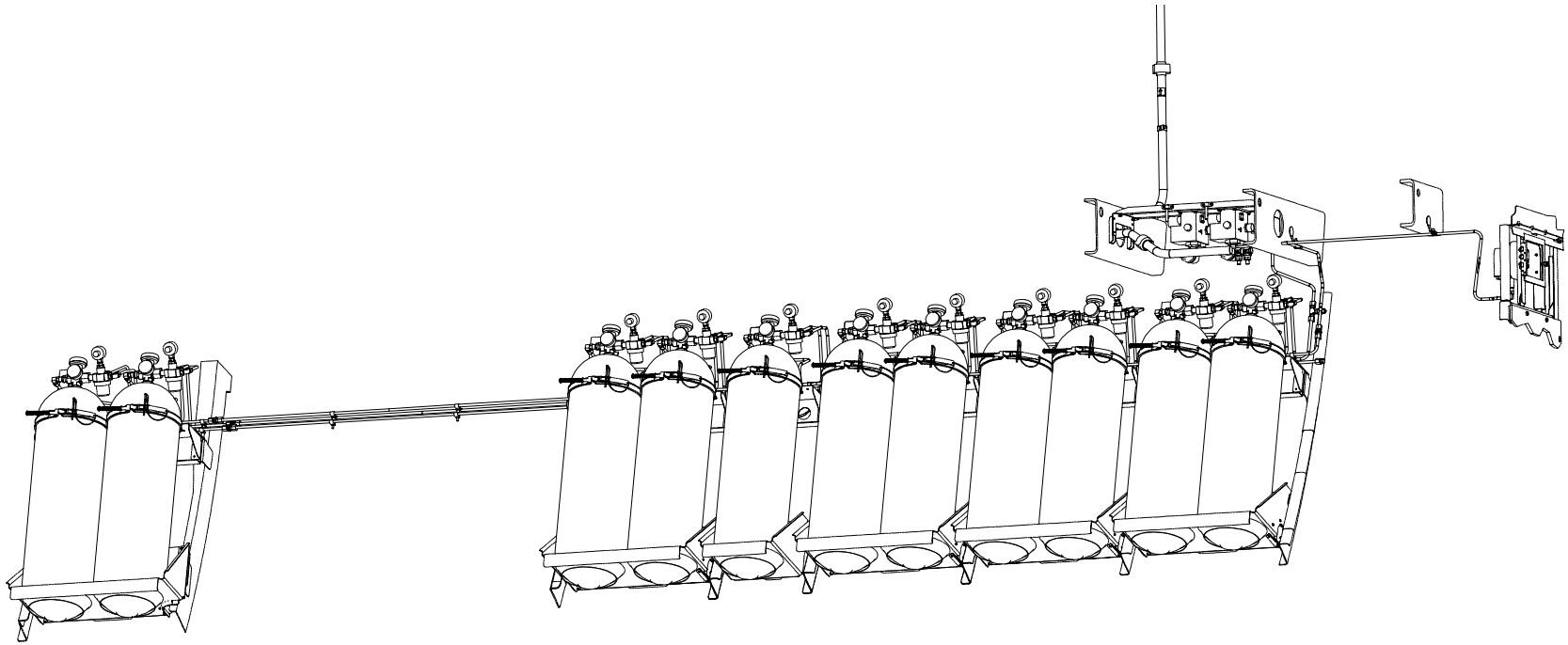

Figure 3.0-9. Typical Passenger Oxygen Cylinder Installation

3.2.3 Supplemental Oxygen Requirements

The FAA and JAA requirements for supplemental passenger oxygen systems are the same for both chemical and gaseous type systems. The amount of supplemental oxygen that is required for each person flying on a commercial jet transport aircraft is defined in FAR/JAR 25.1443(c). It states the mean tracheal oxygen partial pressure in mm. Hg. required at different cabin altitudes. To make these values more useful for our analysis, they are converted to L/m NTPD for cabin altitude starting at 10,000 ft and then in 1,000-ft increments to 40,000 ft. This conversion is a lengthy process and is covered in Society of Automotive Engineers (SAE) document AIR 825B, section VI.

The FAA requires passenger oxygen mask to meet TSO-C64a. This Technical Standard Order defines the minimum performance for passenger oxygen masks. For flow rate performance, the TSO references SAE standard AS 8025 for mask design and AS8025 references AIR 825B for the performance values.

Table 3.0-2 lists the minimal supplemental oxygen requirements needed for an individual at each cabin altitude to meet FAR 25.1443(c). These consumption rates are consistent for any commercial jet transport aircraft. In any system design it is prudent to add a safety factor to the minimum requirements to allow for component performance tolerances and possible mask leakage around the face. For our analysis, a 5% safety factor is added. Table 3.0-2 also lists the values for system-level performance for supplemental oxygen provided to each individual.

By using the emergency descent profiles listed in table 3.0-2, it is possible to calculate the rate of consumption of oxygen at each altitude and the total quantity of oxygen required for each major model.

Table 3.0-2. Minimum Oxygen Required at Cabin Altitude

Cabin altitude, ft x 1,000	AIR 825B theoretical oxygen, L/m NTPD	FAR minimum oxygen, L/m NTPD	Minimum system flow, L/m NTPD
10	0.008	0.018	0.018
11	0.107	0.114	0.119
12	0.203	0.204	0.214
13	0.296	0.292	0.306
14	0.386	0.376	0.395
15	0.473	0.458	0.481
16	0.553	0.538	0.565
17	0.639	0.615	0.646
18	0.717	0.689	0.724
18.5	0.756	0.730	0.767
18.5	0.744	0.723	0.759
19	0.820	0.794	0.834
20	0.967	0.934	0.980
21	1.110	1.068	1.121
22	1.248	1.204	1.264
23	1.381	1.344	1.411
24	1.510	1.481	1.555
25	1.634	1.612	1.693
26	1.754	1.738	1.825
27	1.869	1.860	1.953
28	1.981	1.992	2.092
29	2.089	2.122	2.228
30	2.192	2.247	2.359
31	2.292	2.368	2.486
32	2.389	2.499	2.624
33	2.481	2.630	2.762
34	2.571	2.754	2.892
35	2.657	2.891	3.036
36	2.740	3.025	3.176
37	2.819	3.164	3.322
38	2.895	3.307	3.472
39	2.967	3.453	3.626
40	3.035	3.603	3.783

3.2.4 737 Oxygen Consumption Calculation

The rate of oxygen consumption for the 737 can be calculated by multiplying the total number of individuals that require supplemental oxygen by the rate at which each individual needs oxygen, which is dependent on cabin altitude. The rate of supplemental oxygen required for each individual is defined by FAR 25.1443(c) and is discussed in section 3.2.3. The results are shown in table 3.0-2 under “Minimum system flow.”

The total number of individuals requiring oxygen is dependent on three factors. The first is the maximum number of passengers that can be accommodated by the 737 configuration. Second is the number of attendants that are required to support the maximum passenger count. Third, FAR 25.1447(c)(1) requires an additional 10% oxygen masks distributed evenly throughout the passenger cabin.

The maximum number of passengers for the 737-800 is limited to 189 by the FAA. The FAA requires at least one flight attendant for every 50 passengers for a total of four attendants. The total number of individuals requiring supplemental oxygen is then calculated as follows:

Total number of individuals = (189 passengers + 4 attendants) $*$ 1.10
Total individuals = 212

The rate of oxygen consumption at each altitude can then be calculated as follows for the 737-800:

Rate of oxygen consumption = total individuals $*$ L/m at altitude
Rate of oxygen consumption = 212 $*$ value from table 3.0-2

The results for these calculation are shown in table 3.0-3 under “L/m NTPD” and shown graphically in figure 3.0-10.

Total oxygen consumed is dependent on the aircraft descent profile as described in section 3.2. By using data from table 3.0-3 and then defining a descent profile

similar to those shown in figure 3.0-6, the total oxygen consumed can be calculated by integrating the area under the curve between 40,000-ft and 10,000-ft altitudes.

Table 3.0-3. 737-800 Oxygen Consumption Rate Calculations

Altitude, ft x 1,000	Rate, L/m	L/m NTPD
10	0.018	3.8
11	0.119	25.2
12	0.214	45.4
13	0.306	64.9
14	0.395	83.7
15	0.481	102.0
16	0.565	119.8
17	0.646	137.0
18	0.724	153.5
18.5	0.767	162.6
18.5	0.759	160.9
19	0.834	176.8
20	0.98	207.8
21	1.121	237.7
22	1.264	268.0
23	1.411	299.1
24	1.555	329.7
25	1.693	358.9
26	1.825	386.9
27	1.953	414.0
28	2.092	443.5
29	2.228	472.3
30	2.359	500.1
31	2.486	527.0
32	2.624	556.3
33	2.762	585.5
34	2.892	613.1
35	3.036	643.6
36	3.176	673.3
37	3.322	704.3
38	3.472	736.1
39	3.626	768.7
40	3.783	802.0

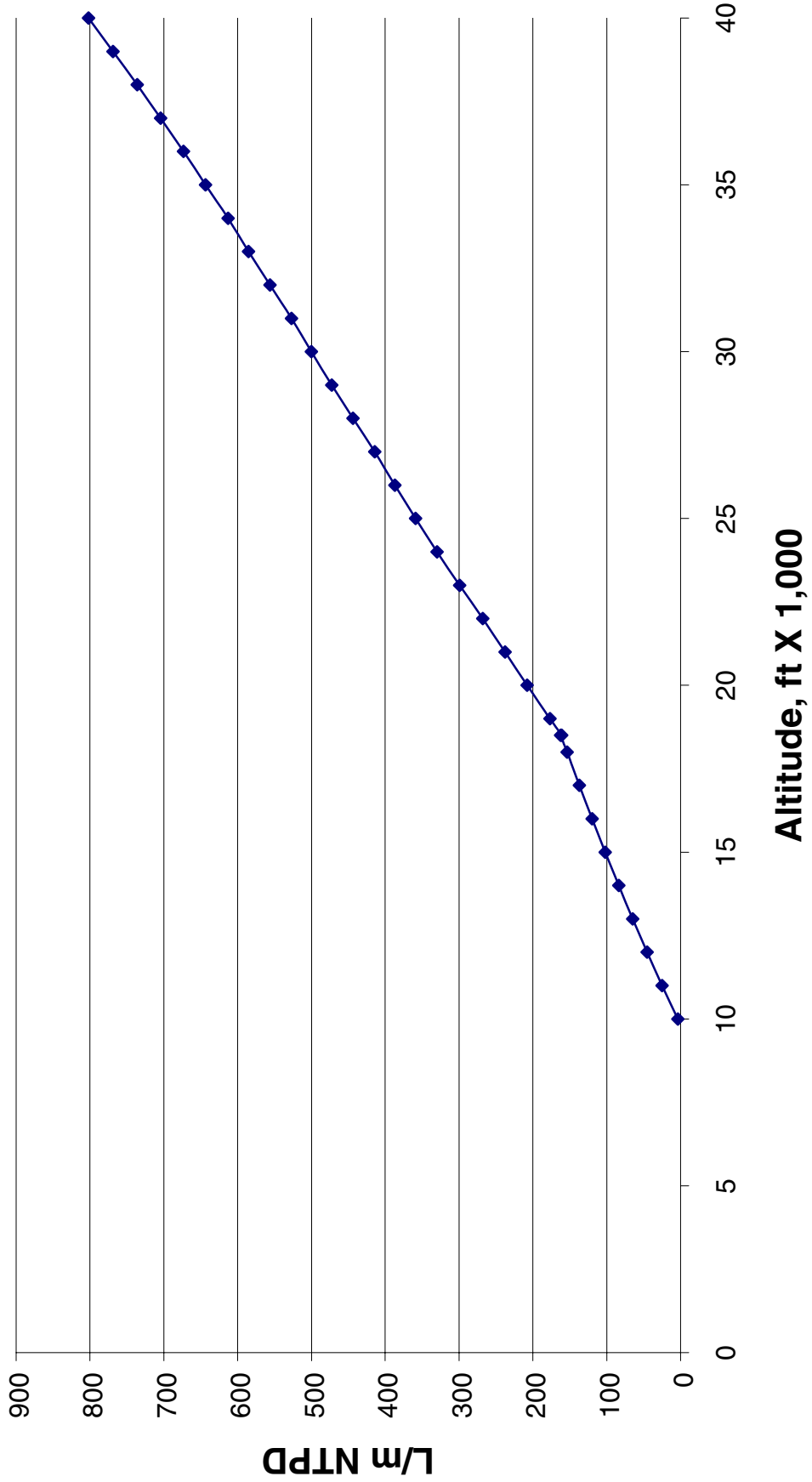

Figure 3.0-10. 737-800 Oxygen Consumption Rates

3.2.4.1 737 Oxygen System Weight

The weight provided for the 737-800 includes the chemical oxygen generator only. The weight numbers do not include the weight of the passenger service units because they are required to be installed independently of the system that delivers or produces the supplemental oxygen supply.

The chemical oxygen system that provides a 12-min supply of oxygen weighs 74 lb.

3.2.5 757 Oxygen Consumption Calculation

The rate of oxygen consumption for the 757 can be calculated by multiplying the total number of individuals that require supplemental oxygen by the rate at which each individual needs oxygen, which is dependent on cabin altitude. The rate of supplemental oxygen required for each individual is defined by FAR 25.1443(c) and is discussed in section 3.2.3. The results are shown in table 3.0-2 under “Minimum system flow.”

The total number of individuals requiring oxygen is dependent on three factors. The first is the maximum number of passengers that can be accommodated by the 757 configuration. Second is the number of attendants that are required to support the maximum passenger. Third, FAR 25.144(c)(1) requires an additional 10% oxygen masks distributed evenly throughout the passenger cabin.

The maximum number of passengers for the 757-200 is limited to 236 by the FAA. The FAA requires at least one flight attendant for every 50 passengers for a total of six attendants. The total number of individuals requiring supplemental oxygen is then calculated as follows:

Total number of individuals = (236 passengers + 6 attendants) $*$ 1.10
Total individuals = 266

The rate of oxygen consumption at each altitude can then be calculated as follows for the 757-200:

Rate of oxygen consumption = total individuals $*$ L/m at altitude

Rate of oxygen consumption = 266 ∗value from table 3.0-2

The results for these calculation are shown in table 3.0-4 under “L/m NTPD” and shown graphically in figure 3.0-11.

Total oxygen consumed is dependent on the aircraft descent profile as described in section 3.2. By using data from table 3.0-4 and then defining a descent profile similar to those shown in figure 3.0-6, the total oxygen consumed can be calculated by integrating the area under the curve between 40,000-ft and 10,000-ft altitudes.

Table 3.0-4. 757-200 Oxygen Consumption Rate Calculations

Altitude, ft X 1,000	Rate, L/m	L/m NTPD
10	0.018	4.8
11	0.119	31.7
12	0.214	56.9
13	0.306	81.4
14	0.395	105.1
15	0.481	127.9
16	0.565	150.3
17	0.646	171.8
18	0.724	192.6
18.5	0.767	204.0
18.5	0.759	201.9
19	0.834	221.8
20	0.98	260.7
21	1.121	298.2
22	1.264	336.2
23	1.411	375.3
24	1.555	413.6
25	1.693	450.3
26	1.825	485.5
27	1.953	519.5
28	2.092	556.5
29	2.228	592.6
30	2.359	627.5
31	2.486	661.3
32	2.624	698.0
33	2.762	734.7
34	2.892	769.3
35	3.036	807.6
36	3.176	844.8
37	3.322	883.7
38	3.472	923.6
39	3.626	964.5
40	3.783	1006.3

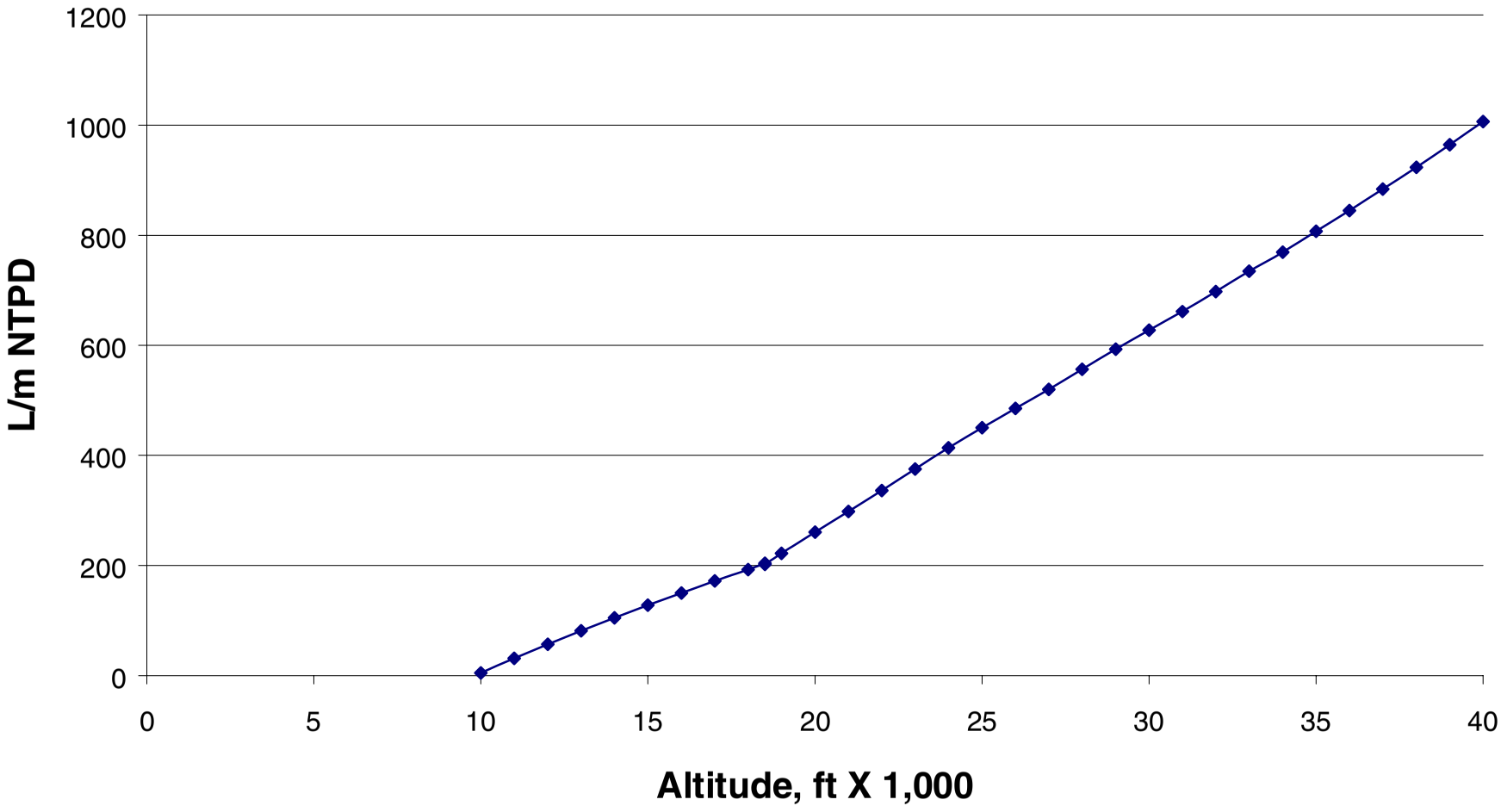

Figure 3.0-11. 757-200 Oxygen Consumption Rates

3.2.5.1 757 Oxygen System Weight

The weight provided for the 757-200 includes the chemical oxygen generator only. The weight numbers do not include the weight of the passenger service units because they are required to be installed independently of the system that delivers or produces the supplemental oxygen supply.

The chemical oxygen system that provides a 12-min supply of oxygen weighs 100 lb.

The chemical oxygen system that provides a 22-min supply of oxygen weighs 151 lb.

3.2.6 767 Oxygen Consumption Calculation

The rate of oxygen consumption for the 767 can be calculated by multiplying the total number of individuals that require supplemental oxygen by the rate at which each individual needs oxygen, which is dependent on cabin altitude. The rate of supplemental oxygen required for each individual is defined by FAR 25.1443(c) and is discussed in section 3.2.3. The results are shown in table3.0-2 under “Minimum system flow.”

The total number of individuals requiring oxygen is dependent on three factors. The first is the maximum number of passengers that can be accommodated by the 767 configuration. Second is the number of attendants that are required to support the maximum passenger count. Third, FAR 25.1447(c)(1) requires an additional 10% oxygen masks distributed evenly throughout the passenger cabin.

The maximum number of passengers for the 767-300 is limited to 350 by the FAA. The FAA requires at least one flight attendant for every 50 passengers for a total of eight attendants. The total number of individuals requiring supplemental oxygen is then calculated as follows:

Total number of individuals = (350 passengers + 8 attendants) $*$ 1.10
Total individuals = 394

The rate of oxygen consumption at each altitude can then be calculated as follows for the 767-300:

Rate of oxygen consumption = total individuals $*$ L/m at altitude

Rate of oxygen consumption = 394 $*$ value from table 3.0-2

The results for these calculation are shown in table 3.0-5 under ”L/m NTPD” and shown graphically in figure 3.0-12.

Total oxygen consumed is dependent on the aircraft descent profile as described in section 3.2. By using data from table 3.0-5 and then defining a descent profile similar to those shown in figure 3.0-6, the total oxygen consumed can be calculated by integrating the area under the curve between 40,000-ft and 10,000-ft altitudes.

Table 3.0-5. 767-300 Oxygen Consumption Rate Calculations

Altitude, ft X 1,000	Rate, L/m	L/m NTPD
10	0.018	7.1
11	0.119	46.9
12	0.214	84.3
13	0.306	120.6
14	0.395	155.6
15	0.481	189.5
16	0.565	222.6
17	0.646	254.5
18	0.724	285.3
18.5	0.767	302.2
18.5	0.759	299.0
19	0.834	328.6
20	0.98	386.1
21	1.121	441.7
22	1.264	498.0
23	1.411	555.9
24	1.555	612.7
25	1.693	667.0
26	1.825	719.1
27	1.953	769.5
28	2.092	824.2
29	2.228	877.8
30	2.359	929.4
31	2.486	979.5
32	2.624	1033.9
33	2.762	1088.2
34	2.892	1139.4
35	3.036	1196.2
36	3.176	1251.3
37	3.322	1308.9
38	3.472	1368.0
39	3.626	1428.6
40	3.783	1490.5

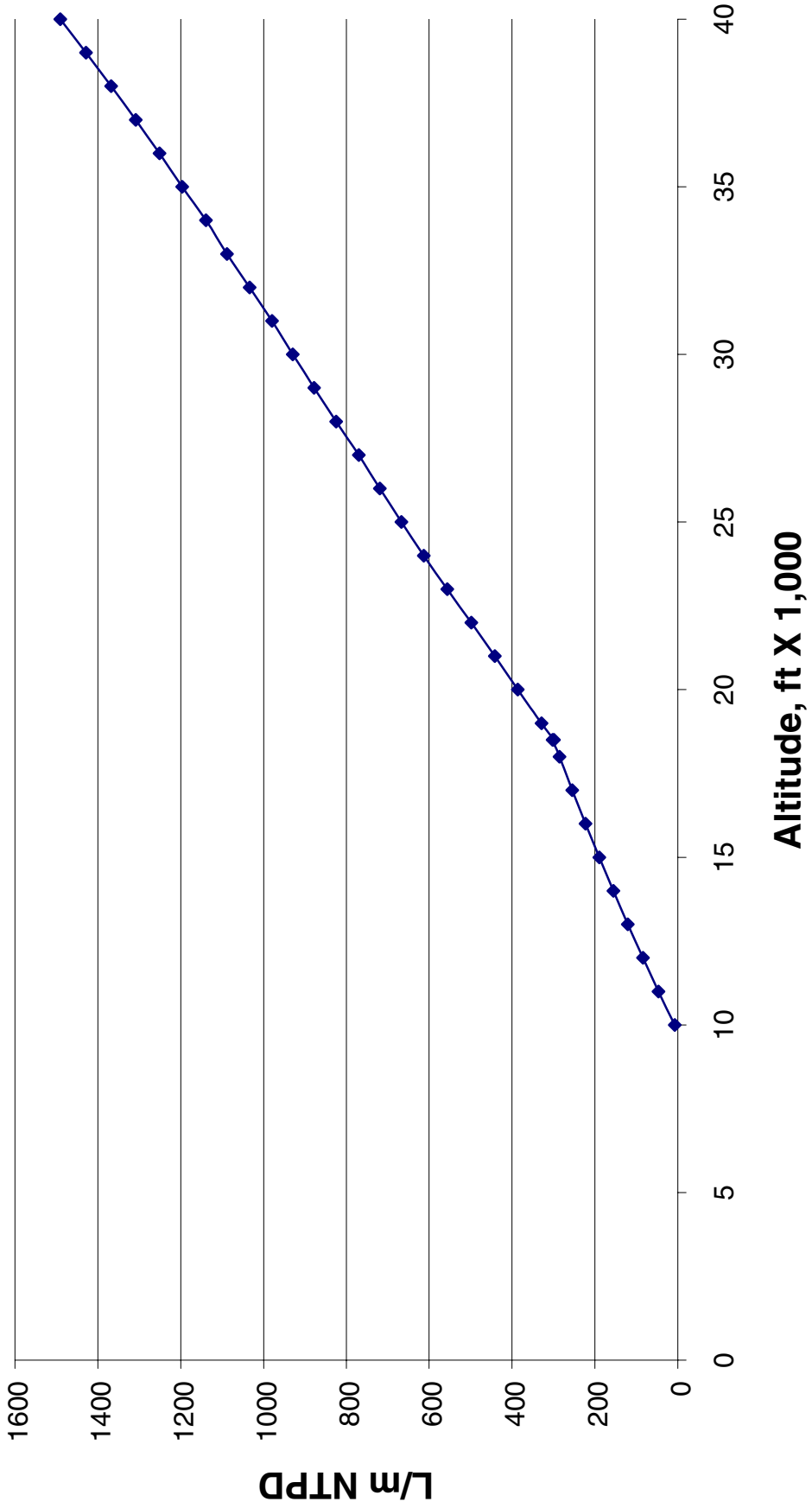

Figure 3.0-12. 767-300 Oxygen Consumption Rates

3.2.6.1 767 Oxygen System Weight

The weight provided for the 767-300 includes the chemical oxygen generator only. The weight numbers do not include the weight of the passenger service units because they are required to be installed independently of the system that delivers or produces the supplemental oxygen supply.

The chemical oxygen system that provides a 12-min supply of oxygen weighs 158 lb.

The chemical oxygen system that provides a 22-min supply of oxygen weighs 366 lb.

3.2.7 777 Oxygen Consumption Calculation

The rate of oxygen consumption for the 777 can be calculated by multiplying the total number of individuals that require supplemental oxygen by the rate at which each individual needs oxygen, which is dependent on cabin altitude. The rate of supplemental oxygen required for each individual is defined by FAR 25.1443(c) and is discussed in section 3.2.3. The results are shown in table 3.0-2 under “Minimum system flow.”

The total number of individuals requiring oxygen is dependent on three factors. The first is the maximum number of passengers that can be accommodated by the 777 configuration. Second is the number of attendants that are required to support the maximum passenger count. Third, FAR 25.1447(c)(1) requires an additional 10% oxygen masks distributed evenly throughout the passenger cabin.

The maximum number of passengers for the 777-300 is limited to 550 by the FAA. The FAA requires at least 1 flight attendant for every 50 passengers for a total of 10 attendants. The total number of individuals requiring supplemental oxygen is then calculated as follows:

Total number of individuals = (550 passengers + 10 attendants) $*$ 1.10
Total individuals = 616

The rate of oxygen consumption at each altitude can then be calculated as follows for the 777-300:

Rate of oxygen consumption = total individuals $*$ L/m at altitude
Rate of oxygen consumption = 616 $*$ value from table 3.0-2

The results for these calculation are shown in table 3.0-6 under “L/m NTPD” and shown graphically in figure 3.0-13.

Total oxygen consumed is dependent on the aircraft descent profile as described in section 3.2. By using data from table 3.0-6 and then defining a descent profile similar to those shown in figure 3.0-6, the total oxygen consumed can be calculated by integrating the area under the curve between 40,000-ft and 10,000-ft altitudes.

Table 3.0-6. 777-300 Oxygen Consumption Rate Calculations

Altitude, ft X 1,000	Rate, L/m	L/m NTPD
10	0.018	11.1
11	0.119	73.3
12	0.214	131.8
13	0.306	188.5
14	0.395	243.3
15	0.481	296.3
16	0.565	348.0
17	0.646	397.9
18	0.724	446.0
18.5	0.767	472.5
18.5	0.759	467.5
19	0.834	513.7
20	0.98	603.7
21	1.121	690.5
22	1.264	778.6
23	1.411	869.2
24	1.555	957.9
25	1.693	1042.9
26	1.825	1124.2
27	1.953	1203.0
28	2.092	1288.7
29	2.228	1372.4
30	2.359	1453.1
31	2.486	1531.4
32	2.624	1616.4
33	2.762	1701.4
34	2.892	1781.5
35	3.036	1870.2
36	3.176	1956.4
37	3.322	2046.4
38	3.472	2138.8
39	3.626	2233.6
40	3.783	2330.3

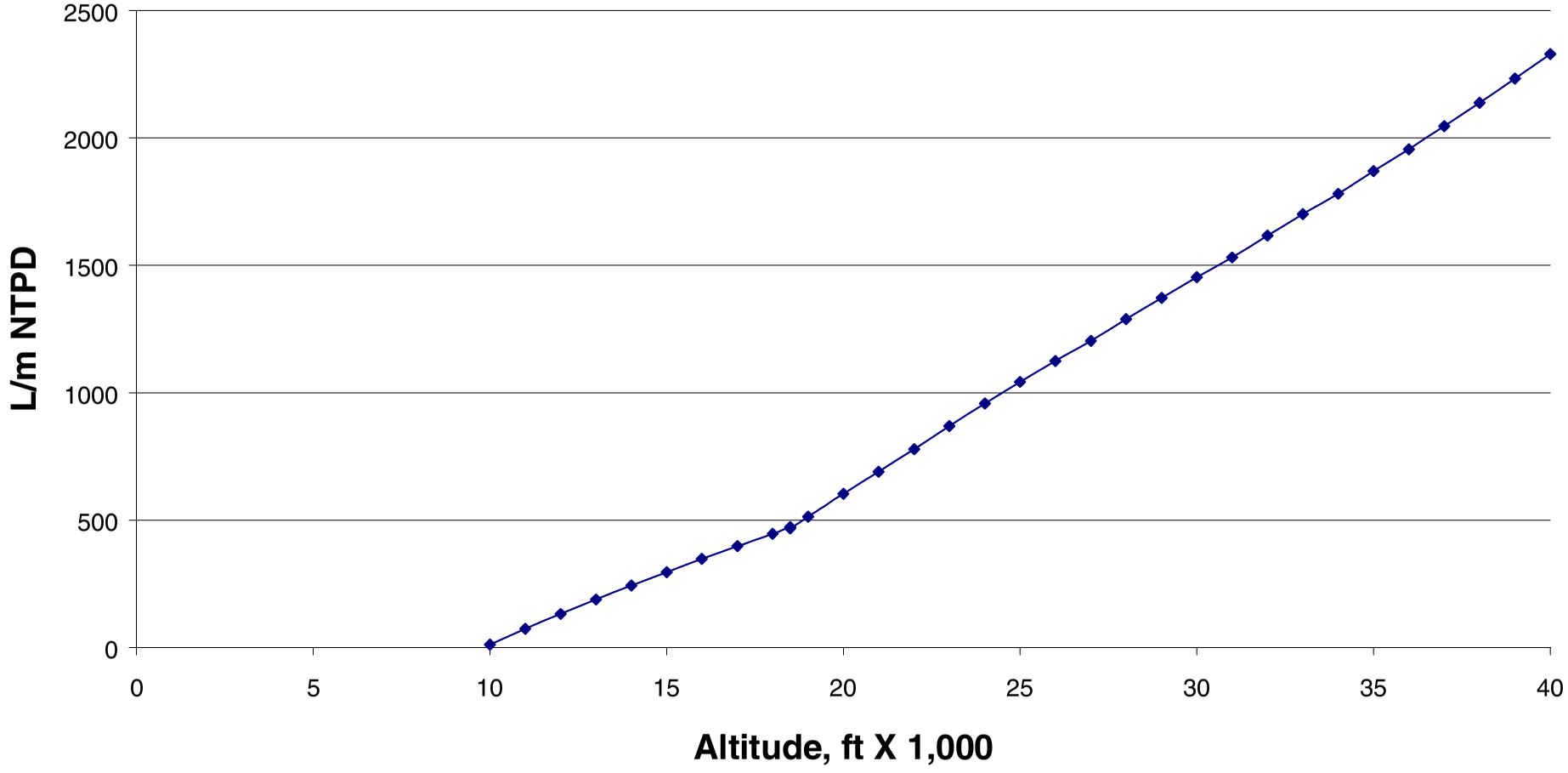

Figure 3.0-13. 777-300 Oxygen Consumption Rates

3.2.7.1 777 Oxygen System Weight

The weight calculations for the 777-300 gaseous oxygen system include the weight of storage cylinders, support assemblies, brackets, pressure regulators, flow control units, couplings, tubing, hoses, and miscellaneous hardware used for installation. The weight numbers do not include the weight of the passenger service units because they are required to be installed independently of the system that delivers or produces the supplemental oxygen supply.

A passenger system consisting of four storage cylinders is required to provide the minimum oxygen supply for the maximum passenger occupancy and the equivalent of a 12-min emergency descent profile. The weight of this system would be 237 lb.

The average quantity of oxygen storage cylinders installed on the 777-300 is 11. A system of this size will weigh 539 lb.

The chemical oxygen system that provides a 12-minute supply of oxygen weighs 213 lb.

The chemical oxygen system that provides a 22-minute supply of oxygen weighs 509 pounds.

3.2.8 747 Oxygen Consumption Calculation

The rate of oxygen consumption for the 747 can be calculated by multiplying the total number of individuals that require supplemental oxygen by the rate at which each individual needs oxygen, which is dependent on cabin altitude. The rate of supplemental oxygen required for each individual is defined by FAR 25.1443(c) and is discussed in section 3.2.3. The results are shown in table 3.0-2 under “Minimum system flow.”

The total number of individuals requiring oxygen is dependent on three factors. The first is the maximum number of passengers that can be accommodated by the 747 configuration. Second is the number of attendants that are required to support the maximum passenger count. Third, FAR 25.1447(c)(1) requires an additional 10% oxygen masks distributed evenly throughout the passenger cabin.

The maximum number of passengers for the 747-400 is limited to 600 by the FAA. The FAA requires at least 1 flight attendant for every 50 passengers for a total of 12 attendants. The total number of individuals requiring supplemental oxygen is then calculated as follows:

Total number of individuals = (600 passengers + 12 attendants) $*$ 1.10

Total individuals = 673

The rate of oxygen consumption at each altitude can then be calculated as follows for the 747-400:

Rate of oxygen consumption = total individuals $*$ L/m at altitude

Rate of oxygen consumption = 673 $*$ value from table 3.0-2

The results for these calculation are shown in table 3.0-7 under “L/m NTPD” and shown graphically in figure 3.0-14.

Total oxygen consumed is dependent on the aircraft descent profile as described in section 3.2. By using data from table 3.0-7 and then defining a descent profile similar to those shown in figure 3.0-6, the total oxygen consumed can be calculated by integrating the area under the curve between 40,000-ft and 10,000-ft altitudes.

Table 3.0-7. 747-400 Oxygen Consumption Rate Calculations

Altitude, ft X 1,000	Rate, L/m	L/m NTPD
10	0.018	12.1
11	0.119	80.1
12	0.214	144.0
13	0.306	205.9
14	0.395	265.8
15	0.481	323.7
16	0.565	380.2
17	0.646	434.8
18	0.724	487.3
18.5	0.767	516.2
18.5	0.759	510.8
19	0.834	561.3
20	0.98	659.5
21	1.121	754.4
22	1.264	850.7
23	1.411	949.6
24	1.555	1046.5
25	1.693	1139.4
26	1.825	1228.2
27	1.953	1314.4
28	2.092	1407.9
29	2.228	1499.4
30	2.359	1587.6
31	2.486	1673.1
32	2.624	1766.0
33	2.762	1858.8
34	2.892	1946.3
35	3.036	2043.2
36	3.176	2137.4
37	3.322	2235.7
38	3.472	2336.7
39	3.626	2440.3
40	3.783	2546.0

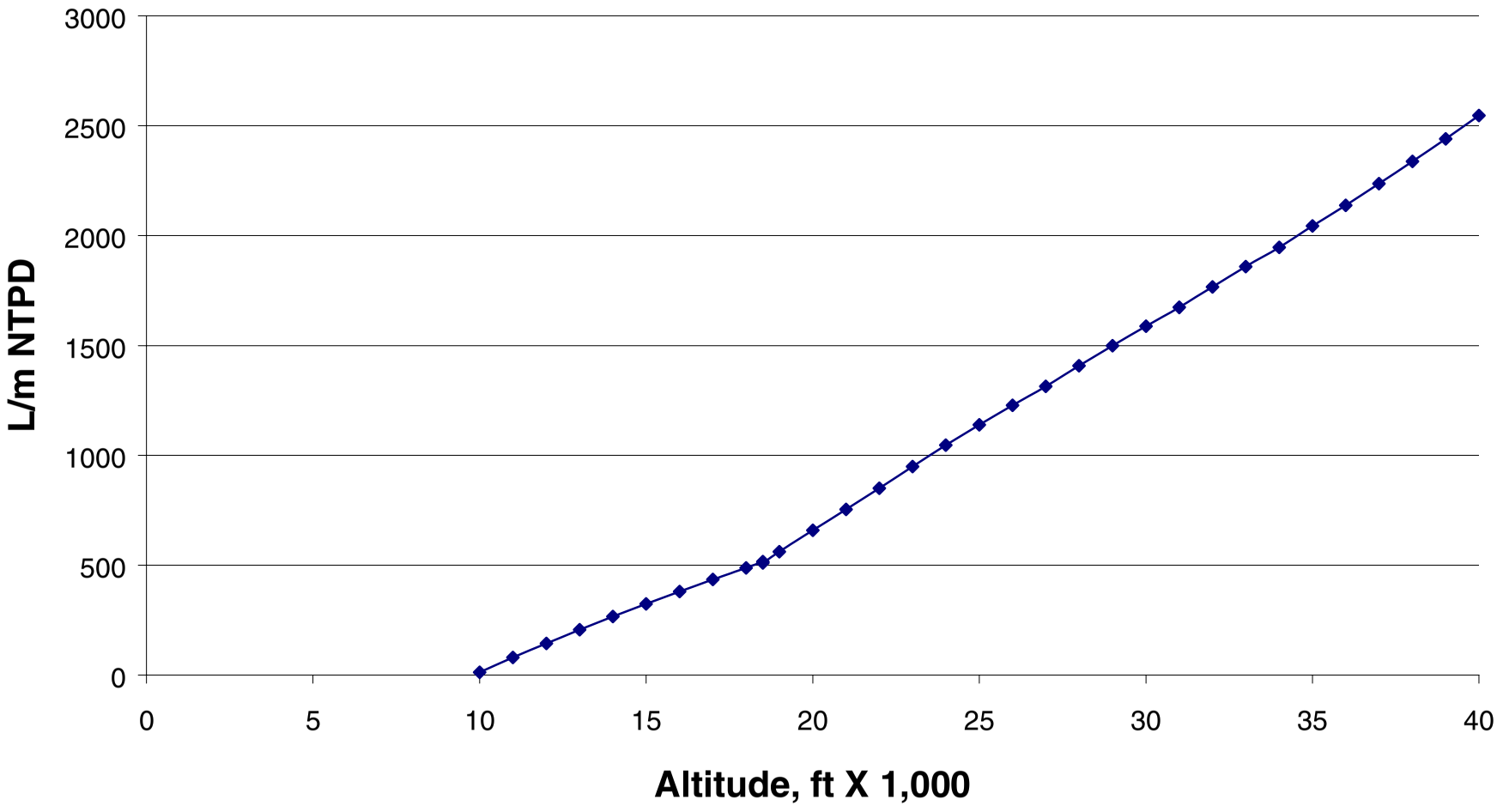

Figure 3.0-14. 747-400 Oxygen Consumption Rates

3.2.8.1 747 Oxygen System Weight

The weight calculations for the 747-400 include the weight of storage cylinders, support assemblies, brackets, pressure regulators, flow control units, couplings, tubing, hoses, and miscellaneous hardware used for installation. The weight numbers do not include the weight of the passenger service units because they are required to be installed independently of the system that delivers or produces the supplemental oxygen supply.

A passenger system consisting of four storage cylinders is required to provide the minimum oxygen supply for the maximum passenger occupancy and the equivalent of a 12-min emergency descent profile. The weight of this system would be 311 lb.

The average quantity of oxygen storage cylinders installed on the 747-400 is nine. A system of this size will weigh 562 lb.

3.2.9 Oxygen Quality

The oxygen calculations for both crew and passenger systems use oxygen quality that meets MIL-PRF-27210G, Type I. The quality of aviator's breathing oxygen is at least 99.5% pure oxygen. This is the quality the FAA expects to be used when specifying the requirements in FAR 25.1439, 25.1443, 25.1445, 25.1447, and 25.1450. Any system that could not generate this level of quality would be subject to special conditions applied by the FAA. At a minimum, increases to the supplemental oxygen flow rates would be required to meet the equivalent levels of protection that is provided today. This could significantly impact the total quantity that must be produced.

Additionally, the FAA may reduce the maximum allowed cabin altitude of 40,000 ft, which lowers the maximum cruise altitude of the aircraft. This would affect the overall performance of the aircraft. If the percentage of oxygen drops in the inspired gas mix to the user, then the maximum cabin altitude must also drop to provide the equivalent level of safety.

As seen in figure 3.0-15, to maintain a 10,000-ft equivalent altitude breathing air (y-axis) at an altitude of 40,000 ft (x-axis), 100% oxygen must be used. To maintain a 10,000-ft equivalent altitude breathing air using an 80% oxygen air mix, the maximum cabin altitude would be approximately 37,000 ft.

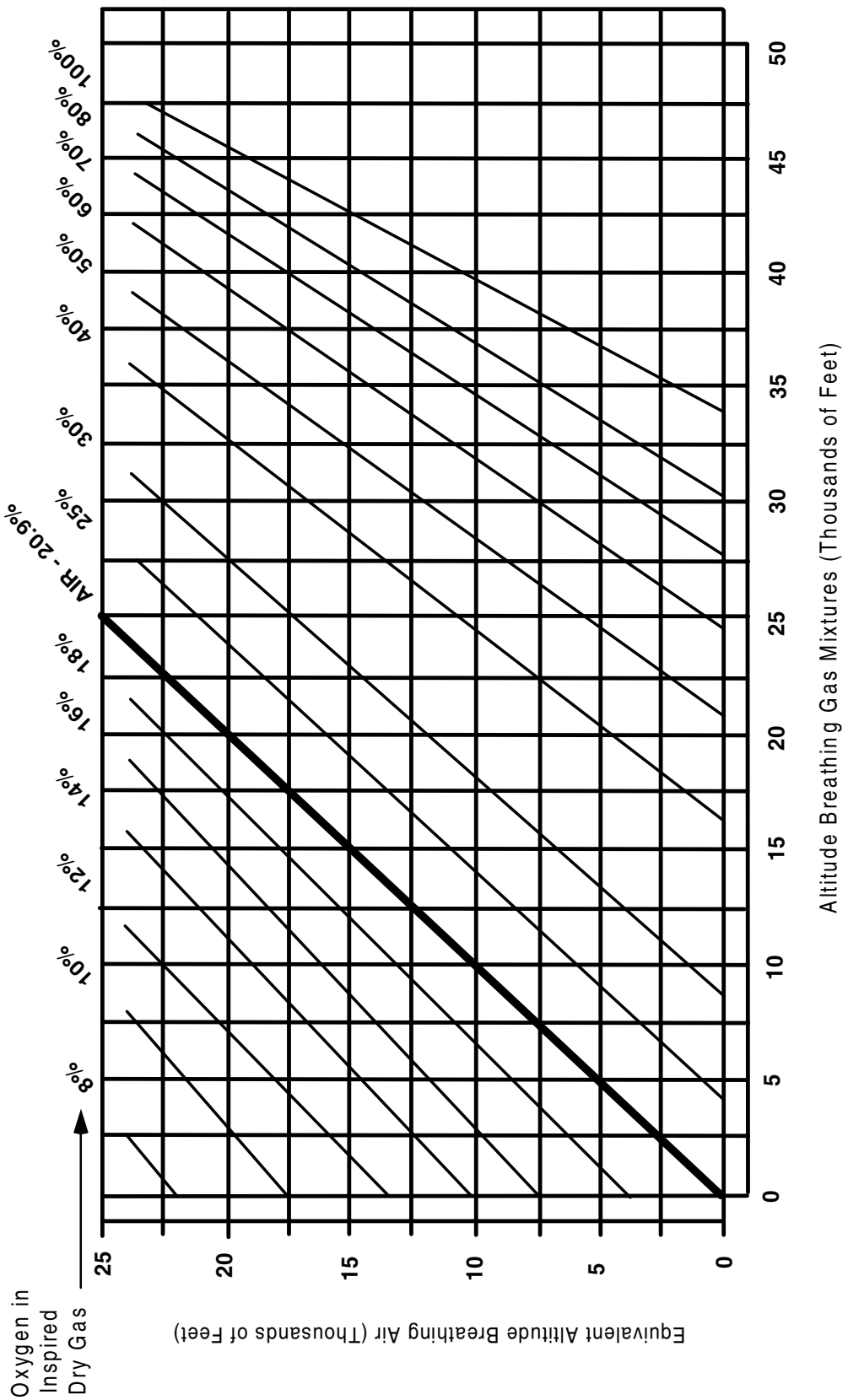

Figure 3.0-15. Equivalent Altitudes

4.0 FIRE SUPPRESSION SYSTEMS

4.1 Cargo Compartment Fire Suppression Systems

4.1.1 Introduction

Boeing airplanes use Halon 1301 (bromotrifluoromethane) as the extinguishing agent in their cargo compartment fire suppression systems. As a result of the Copenhagen Amendment to the Montreal Protocol, production of Halon 1301 has ceased as of December 1993, and commercial use is prohibited except in those areas deemed critical. Use of Halon 1301 in airplane fire suppression systems has been deemed critical. To assess alternative agents for application in airplane fire extinguishing systems, the air transport industry, including manufacturers, airlines, regulatory agencies, and interested academia, formed the International Halon Replacement Working Group (IHRWG). As of this writing, there is no apparent, immediate replacement for Halon 1301 for large commercial airplane applications that is not cost and weight prohibitive or is not toxic. This study provides the basis for evaluating the viability of one potential alternative to Halon 1301: the Onboard Inert Gas Generation System, better known by its acronym OBIGGS.

4.1.2 Scope

This section accomplishes two major tasks. First, it provides the cargo fire extinguishing system design requirements and parameters of each major Boeing airplane model representative of the airplanes manufactured and assembled in Washington State. Heritage McDonnell Douglas airplanes are not included in this study. Second, it lays the groundwork for assessing the viability of OBIGGS for controlling a cargo compartment fire.

This study includes in its assessment current Class C lower lobe (below the passenger deck) cargo compartments for the 737-800, 747-400, 757-300, 767-300, and 777-300 airplanes as well as the Class B main deck cargo compartment on the 747-400 Combi airplane. Also briefly discussed in this document are electronic equipment bay and lavatory fire protection and hand-held fire extinguishers.

4.1.3 Design Overview

Boeing airplanes are currently designed and manufactured to requirements defined in United States Department of Transportation, Federal Aviation Regulations Part 25, Airworthiness Standards: Transport Category Airplanes[1]. Cargo or baggage compartment fire protection systems must comply with one of four different cargo classifications as defined in FAR 25.857. Of the four current cargo and baggage compartment classifications, only the Class C cargo compartments require a built-in fire extinguishing system by regulation.

Class B compartments on Boeing airplanes are also currently designed and manufactured with a built-in fire extinguishing system as a result of one of four design option requirements for compliance to an Airworthiness Directive (AD). ADs are the means by which design changes are mandated by the FAA prior to formal codification in the FAR and also carry the weight of law. A summary of the cargo compartment classifications is included in table 4.0-1.

Table 4.0-1. Cargo Compartment Classifications

	Detection	Extinguishing	Ventilation	Liner	Size
Class A	Crewmember at station	Crewmember	N/A	N/A	Small
Class B[1]	Approved detection system	Crewmember	Controlled	Yes, little burner test[3]	No limit
Class C	Approved detection system	Built-in fire extinguishing system	Controlled	Yes, big burner test[4]	No limit
Class D[2]	No detection system	Oxygen starvation	Controlled and limited	Yes, big burner test[4]	1,000-ft^3 maximum
Class E	Approved detection system	Depressurization	Controlled	Yes, little burner test[3]	No limit

[1]Airworthiness Directive 93-07-15 added built-in fire extinguishing system and other equipment.
[2]FAR Amendments 25-93 and 121-269 made Class D compartments obsolete.
[3]Little Burner Test per FAR 25, Appendix F, Part I
[4]Big Burner Test per FAR 25, Appendix F, Part III

Fire protection in Class B and C cargo compartments is premised on early detection of a fire, prompt discharge of the cargo fire extinguishing system, ventilation control, and fire hardening of key areas within the cargo compartment. The terms extinguishing and suppression are used interchangeably within this paper. While desirable, it is not always possible to fully extinguish a fire within an airplane's cargo compartment through discharge of the airplane's fire extinguishing system. The purpose of airplane cargo fire extinguishing systems is to prevent a cargo fire from growing to catastrophic proportions by controlling or suppressing the fire until the airplane can land at a suitable airport and more direct, aggressive fire extinguishing tactics can be applied to the fire.

4.1.3.1 Cargo Smoke Detection Systems

Both Class B and Class C cargo compartments require and are designed with smoke detection systems. All Boeing models excepting the 737 utilize flow-through smoke detectors in the cargo compartment smoke detection systems. The 737 airplane models use area smoke detectors. A flow-through detection system consists of a distributed network of sampling tubes, which bring air sampled through various ports in the cargo compartment ceiling to smoke detectors located outside the cargo compartment and then exhaust the air. An area detection system consists of smoke detectors installed in various locations in the cargo compartment ceiling.

Once smoke is detected by either type of system, aural and visual alarms are annunciated in the flight deck. A light on the applicable fire extinguishing arming switch is illuminated in the airplane flight deck and an engine indicating and crew alerting system (EICAS) message is displayed, alerting the flight deck crew to the cargo compartment fire. A typical flow-through smoke detection system is schematically represented in figures 4.0-1, 4.0-2, and 4.0-3.

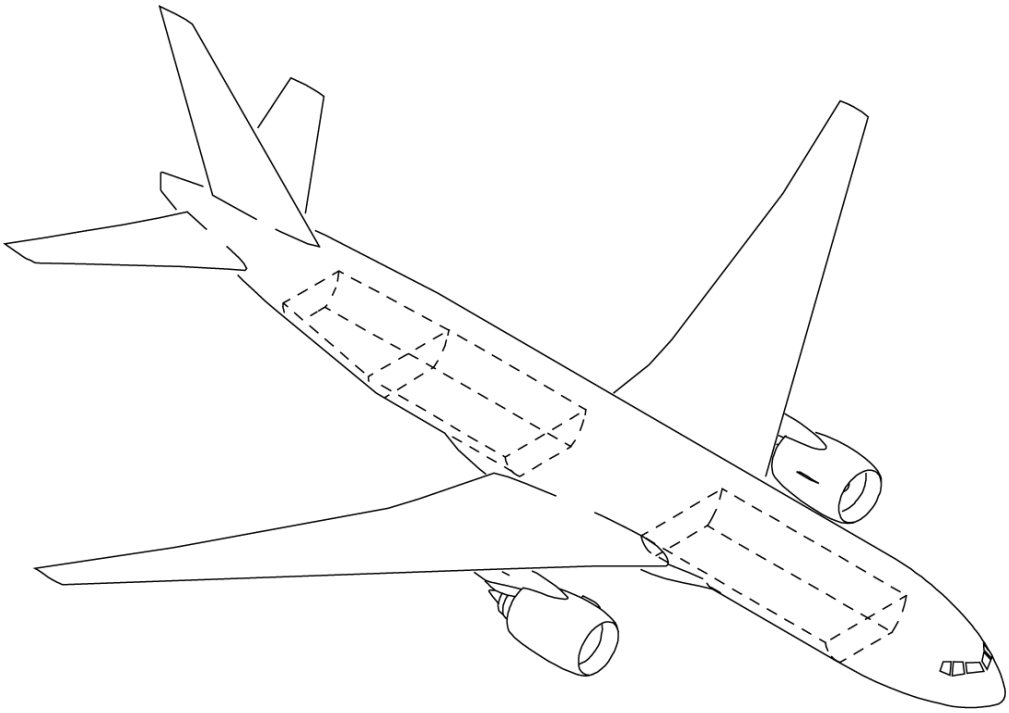

Figure 4.0-1. 777 Airplane Lower Cargo Compartments

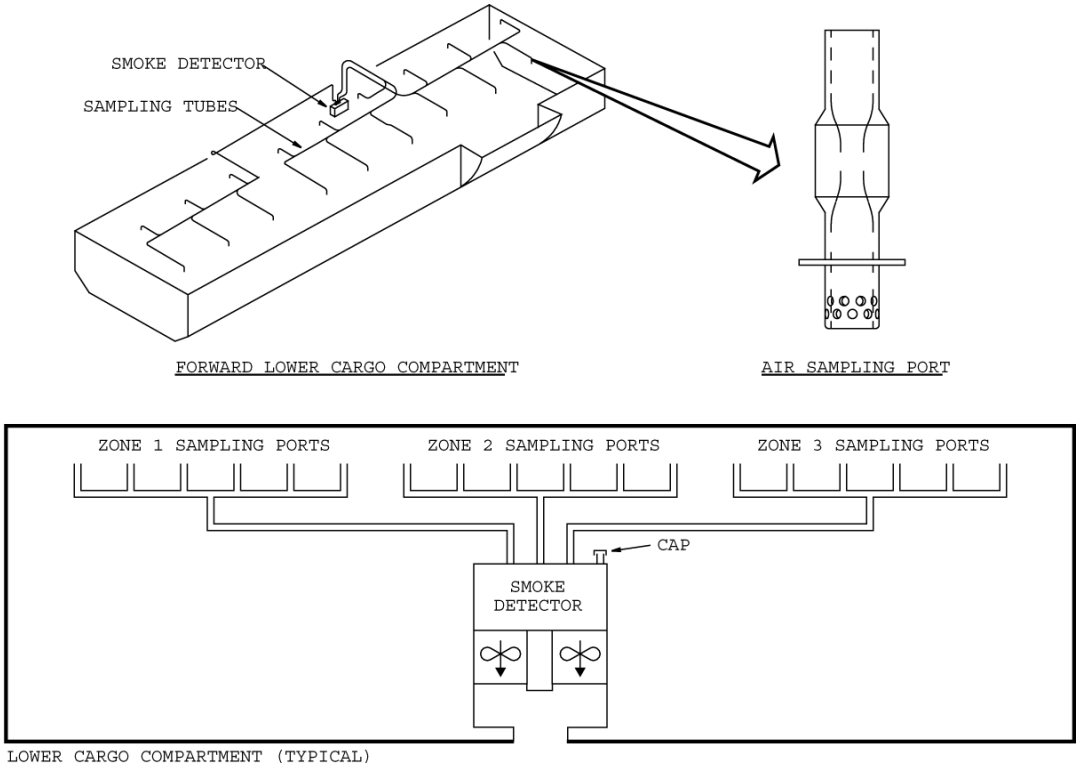

Figure 4.0-2. Representative 777 Flow-Through Cargo Smoke Detection System

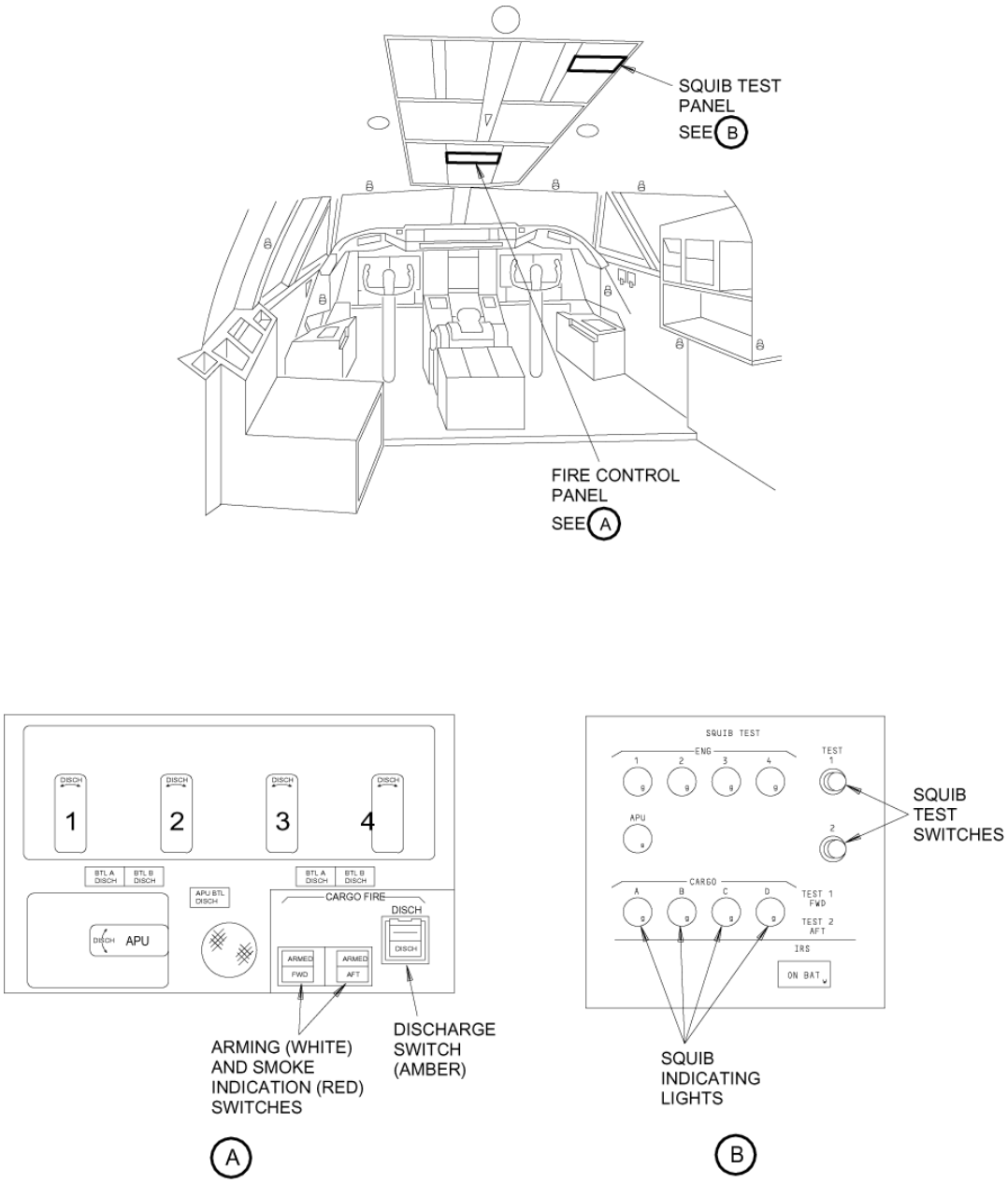

Figure 4.0-3. Flight Deck Indication and Control of Cargo Fire Protection System

4.1.3.2 Flight Deck Procedures for Cargo Fire

Once a cargo fire condition is annunciated in the flight deck, the crew initiates the FAA-approved cargo fire protection procedure. A typical cargo fire protection procedure is to

a. Push applicable ARM switch to ARMED.

b. Push the DISCHARGE switch.

c. Set the landing altitude selector to 8,000 ft.

d. Go to one pack operation.

Pushing the ARM switch, illuminated when the respective cargo smoke detection system is in alarm, sets the appropriate circuit to discharge Halon into the applicable cargo compartment and configures a good portion of the airflow management configuration. Arming the cargo fire extinguishing system is reversible without impact to airplane system integrity. Pushing the DISCHARGE switch discharges the Halon bottles, flow valves, and configures additional airflow management valves. Pushing the DISCHARGE switch is irreversible. Halon discharge is accomplished by pyrotechnic (explosive) cartridge activation. Airflow management that is activated through the DISCHARGE switch is through spring-loaded, closed valves that are manually reset. Setting the landing altitude commands the cabin pressurization system (cabin altitude) to the altitude selected. Going to one pack controls airplane ventilation rates.

Airflow management is accomplished to minimize smoke penetration from a controlled cargo fire into occupied areas of the airplane and to minimize Halon leakage from the cargo compartment. Airflow management in the fire mode is a balancing act between smoke penetration and Halon retention. Airflow is needed to prevent smoke from penetrating from a cargo fire into normally occupied areas of the airplane typically located directly above the cargo compartment. Increased airflow results in increased leakage through the various leakage paths in the cargo compartments as the air migrates toward the outflow valves that control airplane pressurization.

4.1.3.3 Cargo Fire Extinguishing Systems

Boeing airplane cargo fire extinguishing systems provide minimum Halon 1301 concentration coverage for 1 hr or more, depending on the airplane model. Discharge of the cargo fire extinguishing system occurs when the pilot pushes the DISCHARGE switch after arming the applicable cargo compartment's cargo fire arming switch (fig. 4.0-3). Typically, the cargo fire extinguishing systems have a knockdown discharge and a metered discharge of Halon 1301. The respective cargo compartments utilize common bottles in the knockdown and the metered systems. The Halon from the bottles can be discharged to one compartment or the other. There is not sufficient Halon to provide adequate fire protection to both compartments simultaneously, and the airplane is not required to fight a fire in both compartments simultaneously. The probability of a cargo fire in one compartment is improbable. The probability there would be a cargo fire in each compartment on the same flight is less than extremely improbable. Figures 4.0-4, 4.0-5, and 4.0-6 give a visual overview of an airplane's fire extinguishing system. Figures 4.0-7 and 4.0-8 are photographs of 747-400 lower lobe and main deck cargo compartments.

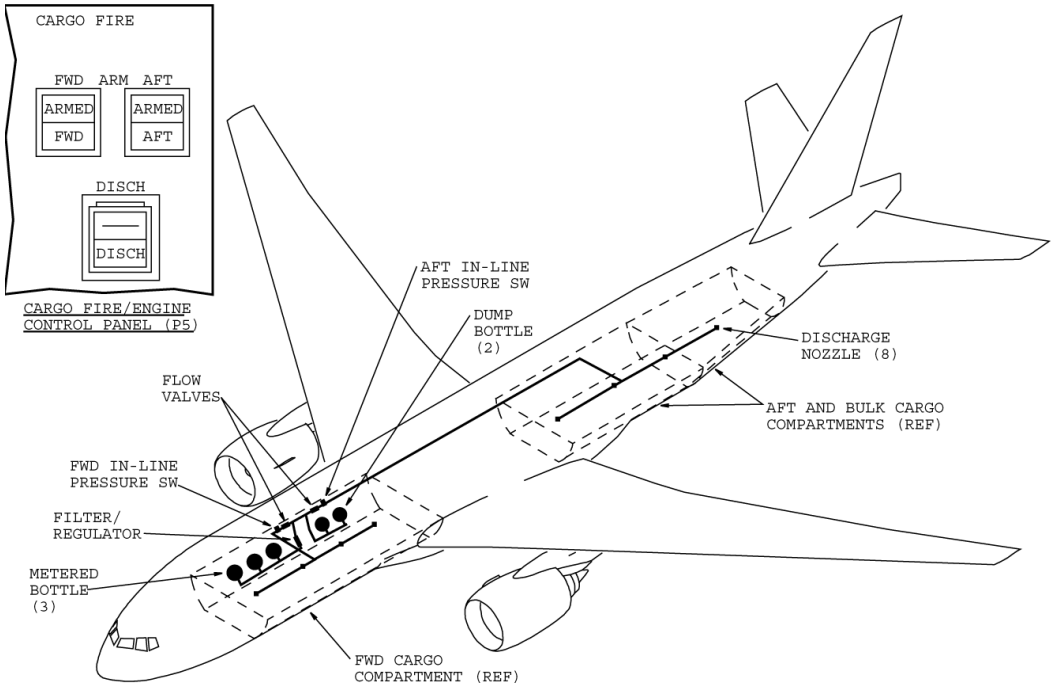

Figure 4.0-4. 777 Cargo Fire Extinguishing System

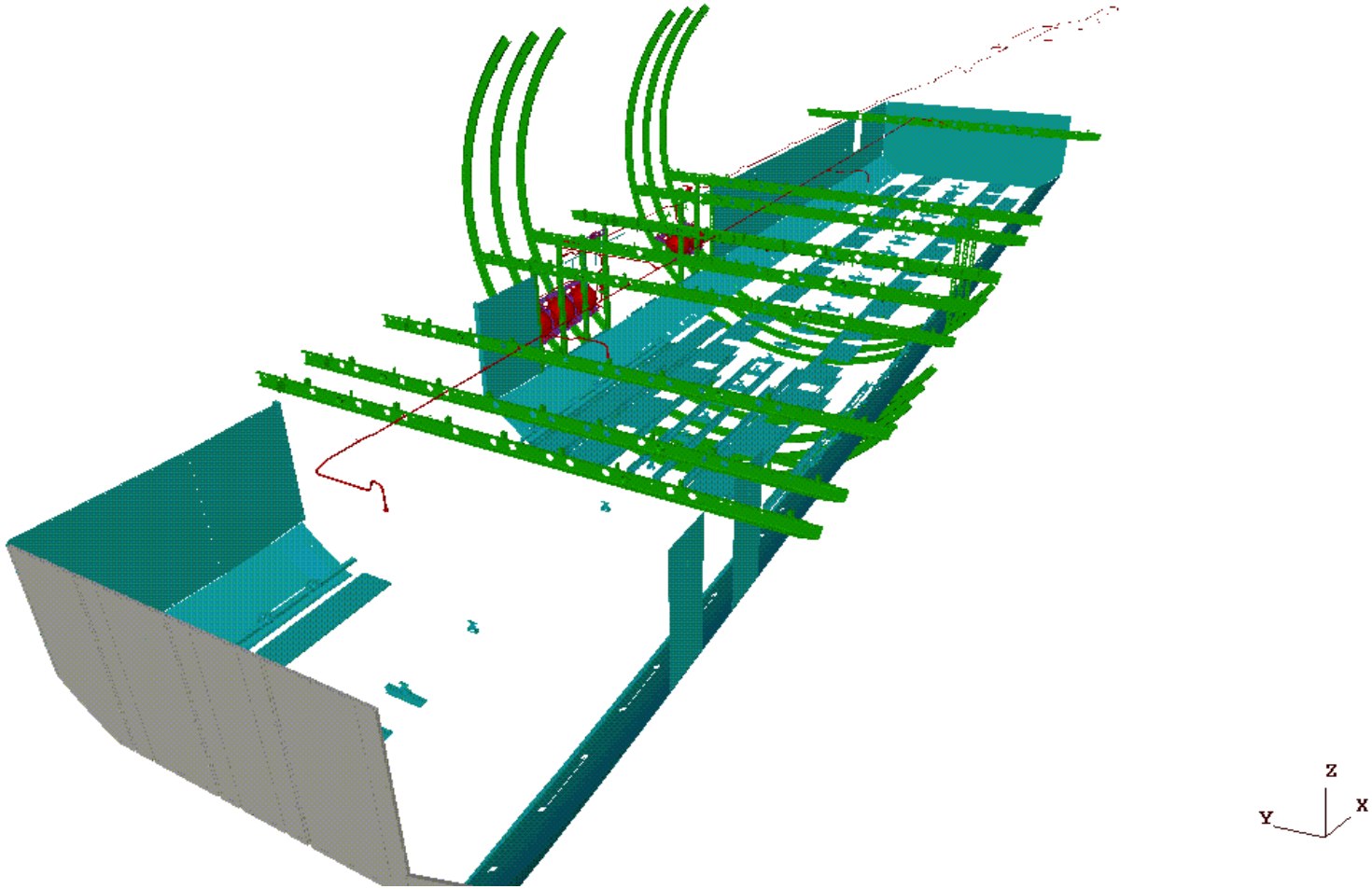

Figure 4.0-5. Isometric 777 Cargo Compartment Fire Extinguishing System

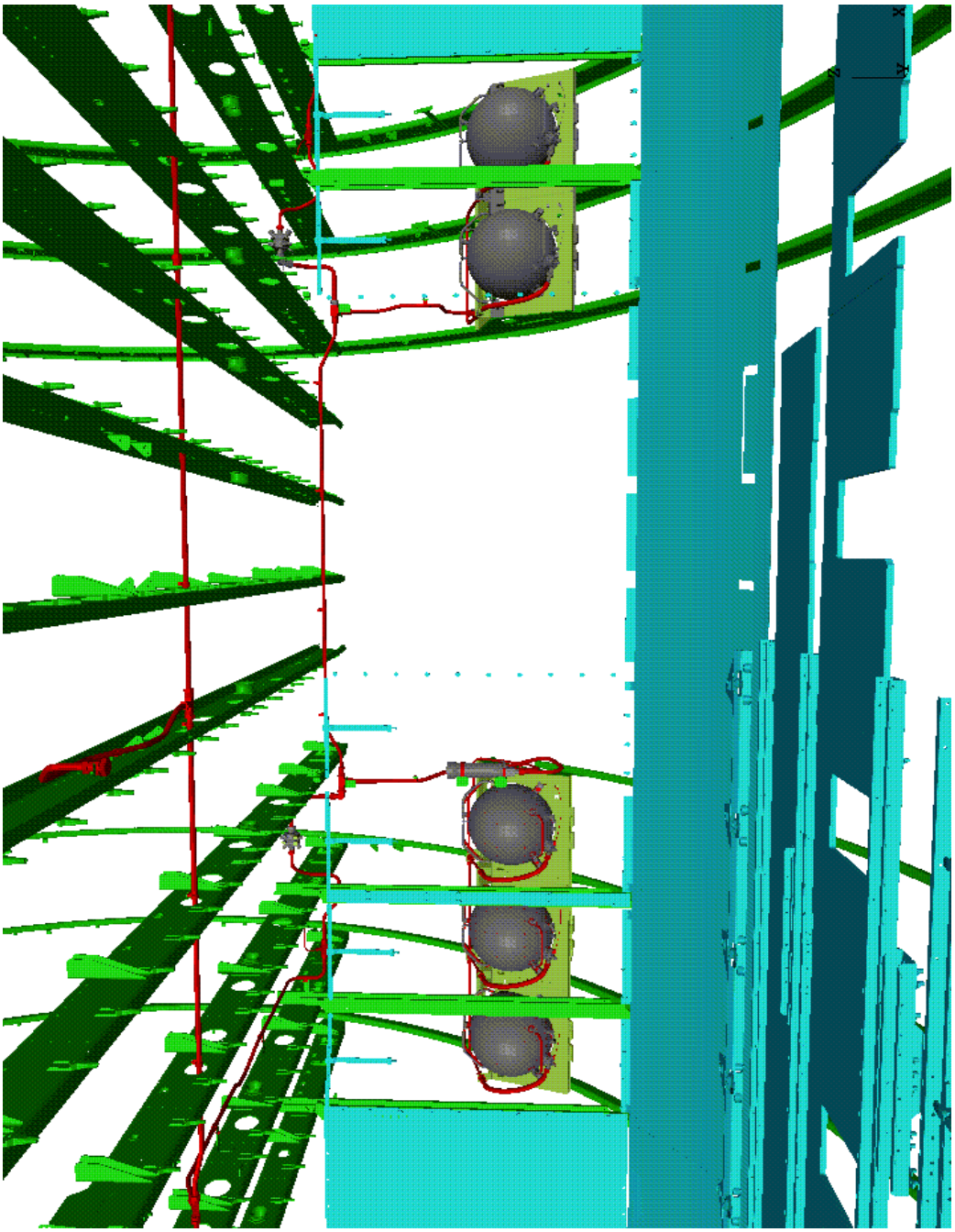

Figure 4.0-6. Isometric 777 Cargo Fire Extinguishing System Bottle Installation

Figure 4.0-7. 747-400 Lower Cargo Compartment

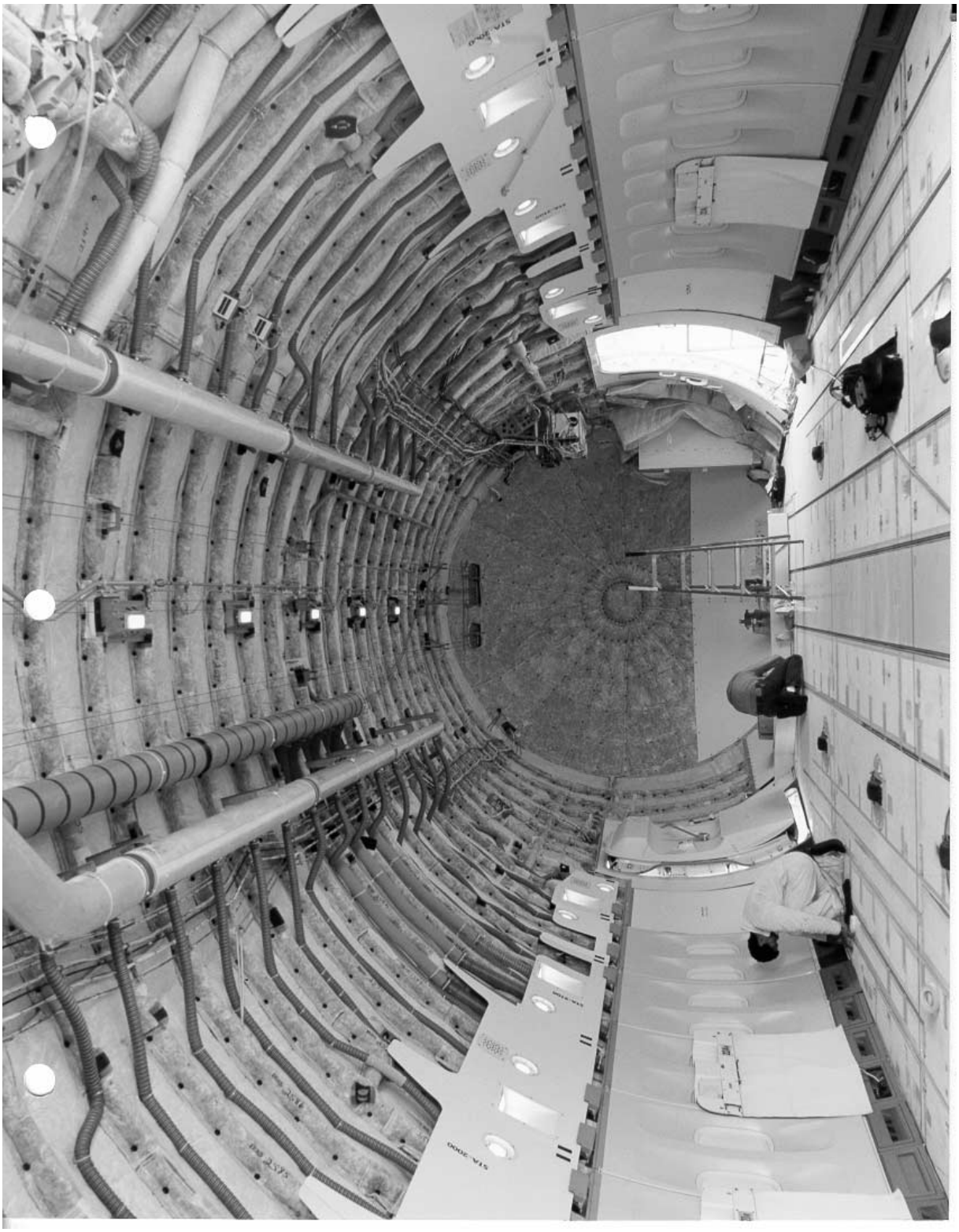

Figure 4.0-8. 747-400 Main Deck Cargo Compartment

In all models, when a cargo fire is detected, knockdown Halon is discharged immediately. The system is designed to provide a minimum 5% concentration by volume initially. A minimum 3% concentration is provided for the remainder of the flight. The 747-400, 757, 767, and 777 airplane models have a metering system discharge. The 737 is not designed for a metering system discharge. The metering system provides a steady-state Halon flow rate to the cargo compartment to maintain minimum 3% Halon concentrations by volume. On the 757-300, the metering system is activated at the same time as the knockdown discharge. On the 747-400, 767, and 777 models, the metering system is activated after a 20- or 30-min automatic time delay. The required Halon flow rate through the metering system is controlled by a regulation system and is a function of compartment leakage rate, cabin altitude, and compartment temperature. Minimum Halon concentrations are required at all times after detection of a fire for the required duration for any cargo-loaded configuration. Table 4.0-2 summarizes the specific cargo fire extinguishing system performance parameters by airplane model.

Table 4.0-2. Cargo Fire Extinguishing Performance by Airplane Model

	737-800	**747-400**	**747-400 main deck**	**757-300**	**767-300**	**777-300**
Initial discharge system						
Quantity of Halon 1301, lb	33	110	294	33	80	137
Max concentration forward*	15%	6.8%	7% (main deck)	9%	7.4%	7%
Max concentration aft*	12%	6.2%	n/a	8%	7.6%	6.6%
Time to 5% concentration	$^1/_2$ min	2 min	$^2/_3$ min	$^1/_2$ min	1 min	2 min
Time to max concentration	$1^1/_2$ min	3 min	1 min	$1^1/_2$ min	$1^1/_2$ min	3 min
Metered discharge system	n/a					
Quantity of Halon 1301, lb		160	920	55	113	240
Sustained concentration forward		3.7%	3.2%	8%	3.2%	5.0%
Sustained concentration aft		3.6%	n/a	6%	3.8%	3.6%
Duration above 3%	>60 min	>195 min	>90 min	>195 min	>195 min	>195 min
Sustained compartment test leakage rate in fire mode	4 ft^3/m forward, 12 ft^3/m aft, (11 ft^3/m forward, 19 ft^3/m aft unpressurized)	82 ft^3/m forward, 84 ft^3/m aft	955 ft^3/m	11 ft^3/m forward, 14 ft^3/m aft	61 ft^3/m forward, 57 ft^3/m aft	78 ft^3/m forward, 99 ft^3/m aft
Cabin altitude in fire mode	8,000 ft	8,500 ft	8,000-8,500 ft	9,500 ft	7,500 ft	8,000ft
Initial cargo ventilation rate For ventilated compartments	None	Up to 1,800 ft^3/m	Up to 1,800 ft^3/m	Up to 300 ft^3/m	Up to 500 ft^3/m	Up to 1,200 ft^3/m
Cargo fire extinguishing total system gross weight	70 lb	410 lb	1,680 lb	150 lb	310 lb	500 lb

*Empty compartment average concentration.

The knockdown system in all Boeing airplane cargo fire extinguishing systems consist of the Halon bottles discharged through a distribution tubing system to discharge nozzles in the respective cargo compartment ceiling. In addition to the bottles and distribution system, the knockdown system includes necessary wiring and control circuitry. The knockdown system is sized as a function of compartment volume, temperature, and cabin altitude and typically takes 1 to 2 min to reach maximum concentrations. The Class C compartment Halon knockdown system has as little as 33 lb of Halon for the 737-800 to as much as 137 lb for the much larger 777-300 cargo compartments. The 747-400 Class B main deck compartment discharges 294 lb of Halon in its knockdown system. Halon distribution systems are designed to discharge Halon evenly throughout the cargo compartment.

The metered system is either discharged at the same time as the knockdown or after a specified time delay and provides a steady-state Halon flow rate to maintain compartment Halon concentrations above a minimum level for a specified duration. The metered system typically includes fire extinguishing bottles, a filter/dryer, a regulator, controlling orifices, a distribution tubing network, discharge nozzles in the ceilings of the cargo compartments, and the necessary wiring and flight deck control. The filter/dryer removes possible contaminants from the Halon discharge. The regulator and controlling orifice function to maintain a constant Halon flow rate. The metered flow rate is a function of compartment leakage. The higher the compartment leakage rate, the higher the Halon flow rate must be to compensate. Cargo compartments are generally designed to minimize compartment leakage when in fire mode to maximize Halon retention and to reduce smoke penetration effects. Class C compartment leakage rates vary from as little as 11 ft^3/m on the 757-300 to as much as 99 ft^3/m on the 777-300 airplane. The 747-400 Class B main deck compartment's leakage rate was 955 ft^3/m.

4.1.3.4 Cargo Compartment Physical Parameters and Fire Hardening

Lower lobe Class C cargo compartments are long, narrow, and low in height, fitting within the contours of the airplane's fuselage and airplane structure. Boeing airplane Class C cargo compartments range in size from less than 800 ft^3 on the 737-800 airplane to greater than 6,000 ft^3 on the 777-300 airplane. The Class B main deck cargo compartment on a 747-400 Combi has a volume of nearly 11,000 ft^3. By design, there is a 2-in clearance area between loaded cargo and the ceiling where the Halon is discharged. However, with palletized and bulk cargo, this minimum clearance is not always maintained in service and damage or obstruction to the discharge nozzles and liners is possible. The sidewalls and ceiling of Class C compartments are fire-hardened. Critical systems within a Class B compartment are protected by a fire-hardened liner. A fire-hardened liner is one that passes the burn-through requirements of FAR 25, Appendix F, Part III. Table 4.0-3 summarizes the airplane cargo compartment physical dimensions.

Table 4.0-3. Cargo Compartment Physical Parameters by Airplane Model (sheet 1 of 2)

	737-800	**747-400**	**757-300**	**767-300**	**777-300**
Cargo compartment free air space volume					
Forward	719 ft^3	5,000 ft^3	1,071 ft^3	3,096 ft^3	6,252 ft^3
Length	298 in	510 in	495 in	486 in	590 in
Width	125 in	184 in	80 in	140 in	164 in
Height	42 inches	80 inches	44 inches	68 inches	80 inches
Percent of compartment volume occupied by cargo	Up to 50%	Up to 67%	Up to 75%		Up to 67%
Aft	961 ft^3	5,000 ft^3	1,295 ft^3	3,152 ft^3	5,667 ft^3
Length	221 in	680 in	558 in	572 in	817 in
Width	123 in	184 in	80 in	140 in	164 in
Height	45 in	80 in	54 in	68 in	80 in
Percent of compartment volume occupied by cargo	Up to 50%	Up to 67%	Up to 75%	Up to 67%	Up to 67%
Main deck (747-400 only)		10,912 ft^3			
Length		672 in			
Width		232 in			
Height		150 in			
Percent of compartment volume occupied by cargo		Up to 50%			
Cargo compartment free air space volume					
Forward	719 ft^3	5,000 ft^3	1,071 ft^3	3,096 ft^3	6,252 ft^3
Length	298 in	510 in	495 in	486 in	590 in
Width	125 in	184 in	80 in	140 in	164 in
Height	42 inches	80 inches	44 inches	68 inches	80 inches
Percent of compartment volume occupied by cargo	Up to 50%	Up to 67%	Up to 75%		Up to 67%
Aft	961 ft^3	5,000 ft^3	1,295 ft^3	3,152 ft^3	5,667 ft^3

Table 4.0-3. Cargo Compartment Physical Parameters by Airplane Model (sheet 2 of 2)

	737-800	**747-400**	**757-300**	**767-300**	**777-300**
Length	221 in	680 in	558 in	572 in	817 in
Width	123 in	184 in	80 in	140 in	164 in
Height	45 in	80 in	54 in	68 in	80 in
Percent of compartment volume occupied by cargo	Up to 50%	Up to 67%	Up to 75%	Up to 67%	Up to 67%
Main deck (747-400 only)		10,912 ft^3			
Length		672 in			
Width		232 in			
Height		150 in			
Percent of compartment volume occupied by cargo		Up to 50%			

4.1.3.5 Component Qualifications

All equipment installed in the airplane, fire protection systems and otherwise, are qualified generally by rigorous, controlled qualification test procedures to demonstrate the equipment's airworthiness. Equipment specifications and qualification requirements are generally controlled through specification control drawings (SCD). Occasionally problem statements are used to control equipment. SCDs provide complete design, qualification, maintenance, and quality control requirements for any specific component or equipment. The SCD defines airplane interface and spatial envelope requirements, may refer to other Boeing and industry standard documents for acceptable design and test requirements, identifies specific performance and test validation requirements, and defines component quality control requirements.

4.1.3.5.1 General Maintenance Requirements

Cargo fire extinguishing systems are located inside pressurized areas of the airplane. General Boeing maintenance requirements include, but are not limited to

a. No predetermined (scheduled) maintenance intervals on components, only airplane maintenance schedules apply.

b. No piece parts or assemblies with definite life limits less than airplane life expectancy.

c. No on-airplane adjustments.

d. No more than one mechanic for on-airplane maintenance and servicing.

e. Only "common" tools for on-airplane maintenance.

4.1.3.5.2 System Performance Requirements

A system installed within an airplane must meet specific performance requirements. Boeing cargo fire extinguishing system performance requirements include, but are not limited to

a. A specific extinguishing agent quantity discharge for knockdown capability.

b. A specified rate of extinguishing agent discharge for a specified duration for continued suppression capability.

c. Performance within parameters when exposed to life cycle and fatigue testing.

Qualification tests for normally operating equipment require that equipment be operating within specified parameters during exposure to the test stimulus. For equipment that requires periodic operation, the equipment must typically demonstrate that it operates within specified parameters after exposure to the test stimulus. Fire extinguishing system equipment is normally not operating and would typically not be operating for some of the qualification tests.

4.1.3.5.3 Environmental Requirements

Equipment installed in Boeing airplanes must survive and operate in a broad range of environments. The airplane may fly into and be stored in desert or in tundra conditions. It may be cold-soaked or heat-soaked. The airplane may not be at ambient, normally comfortable conditions prior to its required operation. Boeing therefore imposes strict tests representative of the environmental conditions the airplane is exposed to both for storage and for operating conditions. These environmental conditions for equipment inside the pressurized areas of the airplane include, but are not limited to, thermal (table 4.0-4), altitude (table 4.0-5), continuous humidity, exposure to fluids, salt spray, and fungus. Fluids equipment may be exposed to such substances as hydraulic fluid, lubrication oil, cleaning solvents, de-icing fluid, fire extinguishing agent, insecticides, and sullage (waterborne dirt).

Table 4.0-4. Operational and Nonoperational Environmental Temperature Limits

Low temperature: survival (nonoperating)	-55°C
Low temperature: short-term operation	-40°C
Low temperature: continuous operation	-15°C
High temperature: survival (nonoperating)	85°C
High temperature: short-term Operation	70°C
High temperature: continuous operation	70°C

Table 4.0-5. Operational Pressure Altitude Limits

Normal operational	-2,000 to 10,000 ft
Design limit for functioning properly	25,000 ft continuous, 43,000 ft transient (rapid decompression)

4.1.3.5.4 Structural Requirements

An airplane can be a rough environment from routine shock and vibration exposure. Equipment must be able to withstand continuous exposure to the shock of handling and dynamic loads. These handling and dynamic loads include, but are not limited to, mechanical shock, bench handling drop, shipping container handling drop, vibration, acceleration, and airplane operating attitude. The vibration test is typically a sinusoidal scan and 5 hr random vibration in a specified spectrum in each of three perpendicular axes. The vibration tests are several times the normal airplane vibration in order to decrease the time exposure to ensure component integrity. The vibration spectrum varies based on location in airplane. Acceleration tests are conducted at 1.5 to 9.0 g, orientation dependent, or if the orientation is not known, 9.0 g in all directions.

4.1.3.5.5 Electrical Requirements

Boeing electrical requirements include, but are not limited to, ac and dc power characteristics, normal and abnormal steady-state and transient characteristics, voltage transients and spikes, electrostatic discharge susceptibility, radio frequency susceptibility, lightning induced transients, electromagnetic induction, and grounding. New airplane systems require continuous built-in test (BIT) monitoring to provide operational integrity status of electrical equipment. If equipment contains software, that software must be qualified independently of the hardware with its own qualification plan and documentation.

4.1.3.5.6 Component Reliability

The overall cargo fire protection system, to demonstrate compliance to FAR 25.1309(b), must provide a numerical analysis that a catastrophic fire (an undetected and/or uncontrolled in-flight fire) is extremely improbable (currently less than 10^{-9} chance of happening per flight hour). An airplane integrated cargo fire extinguishing system (knockdown and metering systems and associated wiring and control) must reliably provide inerting (adequate fire suppression) gas at minimum concentration levels with a rate of less than $1x10^{-4}$ failures per flight hour to meet the top-level requirement. To support that requirement, a failure modes and effects analysis (FMEA) must be developed to demonstrate the OBIGGS system itself must reliably function with less than $1x10^{-5}$ failures per flight hour, assuming there is a non-OBIGGS knockdown system. A comprehensive numerical analysis must be provided to substantiate component and system reliability.

4.1.3.5.7 Health and Safety

Equipment shall be designed to adequately protect from personnel injury due to moving parts, electrical shock, burns, high energy levels, and toxic and radiation emitting substances. Requirements include, but are not limited to, maximum surface temperature limits, flammability and toxicity requirements to an established standard acceptable to Boeing, and the safe containment of toxic substances both normal and non-normal operating conditions.

4.1.3.6 System Certification

Prior to installation and delivery of an operational fire protection system on an airplane, even a system installed for an in-service evaluation, the system must be certified as compliant to all pertinent regulatory requirements. The process for certifying a new system is typically performed in parallel with the design and component qualification processes. A certification plan is presented and agreed to with the FAA. The certification plan defines the certification requirements of a system and should provide sufficient overall system detail and description so that all certification requirements can be adequately assessed and agreed to. The certification plan includes, but is not limited to, a detailed system description and operation, a functional hazard assessment (FHA), identification and means of compliance to each applicable FAR, minimum dispatch configuration, certification documentation, and a schedule. Compliance to the FARs will typically require qualification of all equipment and components installed in the system and associated formal documentation, possibly system test demonstrations, FMEAs, numerical safety analyses (NSA), and flight test demonstrations. Qualification and flight tests typically require conformity inspections to ensure the test and configuration meet requirements and the tests are properly conducted.

The design and certification of airplane cargo fire extinguishing systems have a history (sec. 4.1.4) from which the system design requirements have evolved, are understood, and are in fair agreement between the industry and the FAA on most specifics. An inerting system, such as OBIGGS, has not been used on large commercial airplane cargo compartments, and its effectiveness for controlling a cargo fire would have to be validated prior to ultimate definition of performance and certification requirements.

The FAR requires an airplane flight test be conducted to demonstrate extinguishing agent dissipation in Class C compartments and that minimum concentrations are maintained throughout the compartment for the required duration in the event of an actual cargo fire. The system is tested to ensure proper operation and to validate system performance parameters. The airplane is configured into the worst case

configuration for maintaining compartment Halon, the test is conducted, and the airplane cargo fire fighting procedure is followed. Analysis is performed, based on flight test results, to demonstrate minimum Halon concentrations are also met for all cargo loading configurations.

Minimum airplane concentration requirements are based on test results conducted by the industry and the FAA. There is no FAR or advisory material specifying what minimum Halon concentrations are required to be, except in one option in AD 93-07-15, Amendment 39-8547, which defines minimum Halon 1301 concentrations for one of the design options for a main deck Class B cargo compartment.

4.1.3.7 FAR Requirements

Airplanes must meet all applicable FARs prior to being certified for use in service. Boeing airplanes satisfy requirements of FAR Part 25. Pertinent FAR Part 25 sections for airplane cargo fire protection systems are included in Part VIII, Appendix I of this document. A portion of these FARs, 25.851, 25.855, 25.857, and 25.858, elaborate on specific cargo fire protection requirements. FAR Amendment 25-93 and 121-269 (Part 121 is for air carrier certification and operation of large aircraft) requires Class D cargo compartments to have an approved smoke detection and fire extinguishing system installed or convert to a Class C cargo compartment. A Class C cargo compartment also requires an approved smoke detection and fire extinguishing system, but doesn't require the specific ventilation limitations a Class D compartment has in the fire mode.

4.1.3.8 Airworthiness Directives

Airworthiness Directives are issued to correct safety problems or require additional safety features or designs that were not a requirement during the original manufacture and Type Certificate of an airplane. They are the primary means by which the FAA can force a design change on already manufactured and delivered airplanes. An AD is issued to correct a design or manufacturing problem found in-service or to require a change to or enhancement to an existing system. One

noteworthy AD, AD 93-07-15, Amendment 39-8547, required modification of all Main Deck Class B compartments to one of four options. The options were to

a. Modify the compartment to Class C requirements.

b. Carry cargo only in approved flame penetration resistant containers.

c. Cover cargo with fire containment covers or in fire containment containers and other improvements.

d. Install a 90-min fire extinguishing system of Halon 1301 providing 5% knockdown or 3% sustained concentrations.

4.1.3.9 Advisory Circulars

Advisory circulars (AC) provide regulatory guidance in demonstrating compliance with particular FAR requirements. They are not the only means, but generally provide procedures and methods for demonstrating compliance that are agreed upon by industry and regulatory agencies. ACs of particular note for designing cargo fire extinguishing systems are AC 25.1309-1A and AC 120-42A.

AC 25.1309-1A, Systems Design and Analysis, describes various acceptable means for showing compliance with the requirements of FAR 25.1309(b), (c), and (d). These means are intended to provide guidance for the experienced engineering and operational judgment that must form the basis for compliance findings. They are not mandatory. Other means may be used if they show compliance with this section of the FAR. This AC provides guidance on such items as the "Fail-Safe Design Concept," analysis of failure conditions, qualitative and quantitative assessments, and FHAs.

AC 120-42A, Extended Range Operation with Two-Engine Airplanes (ETOPS), states an acceptable means, but not the only means, for obtaining approval under FAR Section 121.161 for two-engine airplanes to operate over a route that contains a point farther than 1-hr flying time at the normal one-engine inoperative cruise speed (in still

air) from an adequate airport. Specific criteria are included for deviation of 75 min, 120 min, or 180 min from an adequate airport. This AC limits airplane range on two-engine airplanes to diversion time plus a 15-min holding and an approach and landing.

4.1.4 Historical Development of Cargo Fire Protection Systems

Design of cargo fire protection systems on commercial airplanes is premised on adequately controlling a fire for continued safe flight and landing. In the 1940s, it was recognized that cargo compartment fires represented a serious threat to airplane safety and required timely detection and prompt fire control. Cargo compartment fire protection requirements, and their classifications, were initially established in the Civil Air Regulations (CAR) (precursor to the FAR), Part 4b, effective in November 1946. At first there were only three cargo compartment classifications:

Class A cargo compartments are small cargo/baggage compartments that are readily visible and accessible by attendants. No fire detection or extinguishing system is required. Fire control in Class A compartments is accomplished by the crew using hand-held extinguishers.

Class B compartments are cargo compartments to which the crew has ready access in-flight. There is a detection system to alert the crew to the condition of the compartment, but there is no extinguishing system. Fire control in Class B compartments is accomplished by the crew using hand-held extinguishers.

Class C compartments are cargo compartments that are inaccessible to the crew in-flight. Both a fire detection system and a built-in fire extinguishing system are required. Fire control in Class C compartments is accomplished by discharge of the built-in fire extinguishing system into a compartment with a liner.

In the 1950s, Class D and Class E cargo compartment classifications and their respective requirements were added to the CAR.

Class D compartments are small (less than 1,000 ft^3) compartments that are inaccessible to the crew in-flight. Unless the compartment is ventilated, neither a fire detection nor a fire extinguishing system is required. Fire control in Class D compartments is accomplished by ventilation control (limiting the compartment leakage rate), a liner, and limited volume to sustain a fire. Ventilated Class D cargo compartments require a fire detection system to shut down and control ventilation in the event of a cargo fire.

Class E compartments are used on airplanes that carry only cargo (freighters) and require a detection system. Fire control in Class E compartments is accomplished by shutting off the ventilation airflow to the compartment. Airplanes with Class E compartments typically depressurize to control a cargo fire.

The Federal Aviation Regulations replaced the CAR effective February 1, 1965. In the 1960s, the FAA and private industry conducted test programs to evaluate the effectiveness and the design requirements of different extinguishing systems for use on airplanes. Factory Mutual Research Corporation conducted tests on five promising fire suppression agents when a normal water supply was not present in a confined structure. These five agents were, in descending order of relative system ranking that included cost, effectiveness, reliability, and miscellaneous: Halon 1301 multiple-shot total flooding, automated water sprinkler system, high-expansion foam, Halon 1301 single-shot total flooding, and a high-pressure water fog. These five systems had been reduced from an initial list of 31 agents under consideration that included nitrogen and carbon dioxide inerting.

The FAA conducted tests evaluating the effectiveness of the then current fire protection capabilities of airplane cargo compartments, which were dependent on shutting off airflow to the cargo compartment. Tests summarized in FAA report FAA-ADS-73 concluded that fires in large cargo compartments readily reach damaging proportions even with immediate airflow shutoff on fire detection. Factory Mutual Research Corporation continued its research in the late 1960s into the effectiveness of Halon 1301 on various flammable materials.

In 1967, "flame resistant" liners were established as the standard for airplane interior materials design. All cargo and baggage compartment materials were required by FAR Amendment 25-15 to meet certain self-extinguishing criteria, involving short flame times and burn lengths after the removal of an ignition source, effective October 24, 1967.

The 747-100 airplane was designed and certified in 1969 with a double knockdown Halon 1301 cargo fire extinguishing system, the most effective and efficient extinguishing agent available, that could be discharged into either lower cargo compartment. The initial knockdown provided a 5% minimum knockdown concentration and sustained 3% concentration for 1 hr. After 1 hr, the second fire extinguishing system bottle was discharged and provided 3% minimum concentrations for 1 additional hr. The FAA conducted additional tests, as reported in September 1970 and November 1971, affirming the use of Halon 1301 in airplane cargo fire extinguishing systems.

In August 1980, a cargo fire on a Lockheed L-1011 resulted in the airplane diverting and landing, but all lives aboard being lost prior to any evacuation. This airplane had two nonventilated Class D compartments and one ventilated Class D cargo compartment. The source of the fire was determined to have originated in the ventilated Class D cargo compartment, which had functional smoke detectors.

The FAA conducted tests as reported in DOT/FAA/CT-84/21, February 1985, and reaffirmed the effectiveness of Halon 1301 in controlling airplane cargo fires.

FAR Amendment 25-60 required sidewall and ceiling liners in Class C and D cargo compartments to be upgraded to meet improved flammability standards (currently defined in FAR Part 25, Appendix F, Part III) and Class D compartments were limited to 1,000 $ft^{3,}$ effective June 16, 1986.

In November 1987, a fire ignited in a 747-200 Combi airplane Class B main deck cargo compartment. The fire was detected, but the crew was unable to control the fire through the available portable extinguishing bottles. The airplane crashed and all

passengers and crew were lost. Following the ensuing investigations, the FAA ultimately released an Airworthiness Directive, AD 93-07-15, Amendment Level 8547, requiring that one of four cargo fire protection enhancement options be implemented for main deck Class B cargo compartments. One of those options includes a 90-min main deck fire extinguishing system, which is now installed on all 747 Combi main deck Class B compartments.

The FAA conducted tests as reported in DOT/FAA/CT-89/32 on the fire hazards of aerosol cans in airplane cargo compartments. The conclusion was that the sudden release of hydrocarbon propellants in aerosol cans during a cargo fire increases the potential cargo liner damage.

The Civil Aviation Authority (England) contracted Kidde-Graviner Limited to conduct a series of Class C cargo compartment tests. The results of the tests reaffirmed the 5% knockdown and the 3% sustained concentration levels for Halon 1301 in airplane cargo compartments. One conclusion was that minor differences in crew reaction time had little effect on the ability to control the cargo fire.

The FAA conducted tests as reported in DOT/FAA/AR-96/5, published in June 1996, on the effectiveness of controlling large Class B cargo compartment fires. In the report, it was noted that in one of the fire tests, the average concentration in the test cell was not effective in controlling the fire. The JAA has not accepted compartment average concentration as an acceptable standard to meet on some model airplanes, but instead has required each sampled point within the compartment to independently meet concentration requirements during the test demonstration.

In May 1996, a fire ignited in a Class D compartment on a DC-9 airplane. The airplane crashed shortly after take-off with loss of all lives on board. The FAA issued an amendment to FARs 25-93 and 121-269 requiring all Class D compartments to be upgraded with a smoke detection system and a built-in fire extinguishing system or to be converted to Class C compartments.

4.1.5 Published Industry and FAA Cargo Fire Test Reports and Documents

a. Factory Mutual Research Corporation conducted tests, as reported on May 14, 1965[2], in which it was concluded that Halon 1301 as a fire suppressant system and the automated sprinkler system were the two most promising system concepts for fire fighting where a normal water supply is not available.

b. The FAA conducted tests on characteristics of fire in large cargo aircraft, as reported in March 1966[3], in which it was concluded:

   1. Fires in large (5,000-ft^3) cargo compartments readily reach damaging proportions even with detection and immediate airflow shutoff.

   2. Detection by thermal detection systems is more rapid and reliable than carbon monoxide or smoke detection systems.

c. Factory Mutual Research Corporation, in its report of February 21, 1967[4] evaluating the fire extinguishing characteristics of Freon FE 1301 on flammable liquid fires, concluded that FE 1301 concentrations of 3.6% and 3.3% were required to extinguish CDA-19 alcohol and n-heptane respectively. The report recommended further tests be conducted.

d. Factory Mutual Research Corporation conducted additional tests, as reported on July 28, 1967[5], in which it was concluded a volume concentration of 3% Halon 1301 was shown to be effective on surface burning fires such as paper and wood and could also affect deep-seated fires. A major advantage of Halon 1301 was its ability in low-concentrations to inhibit high-temperature combustion processes.

e. Factory Mutual Research Corporation conducted additional tests on Halon 1301, as reported in October 1968[6], that validated 3.6% Halon concentration for suppressing CDA-19 pan fires and 3.3% for suppressing n-heptane fires in larger enclosures.

f. The FAA conducted additional tests on the characteristics of fire in large cargo aircraft, as reported in September 1970[7], in which it was concluded:

1. The use of Halon 1301 released at the time of fire detection in a cargo compartment can prevent the occurrence of flash fire, greatly reduce the maximum temperatures, and provide significant improvement in fire control.

2. Temperatures and pressures in a large cargo compartment fire may be expected to be higher than those found in a small compartment fire.

3. Fully loaded cargo compartments can result in more severe fire conditions than from a small cargo load.

4. Ventilation rates in excess of 75 ft^3/m will not keep flames from recurring in a large cargo compartment.

5. Fires in a large loaded cargo compartment may be expected to result in a flash fire shortly after detection and ventilation shutoff.

g. The FAA conducted tests on fire extinguishing methods for new passenger/cargo aircraft, as reported in November 1971[8], in which it was concluded:

1. The use of Halon 1301 released at the time of cargo fire detection can prevent the occurrence of flash fire, greatly reduce maximum temperatures, and provide effective fire control for at least 2 hr.

2. Halon 1301 volumetric concentrations as little as 3% can effectively control (5,000-ft^3 compartment volume) cargo fires.

h. The FAA conducted tests, as reported February 1985[9], on the suppression and control of Class C cargo compartments fires, in which is was concluded:

1. The Halon extinguishing system effectively suppressed the initial flames and effectively controlled the fire provided that ceiling liner burn-through did not occur.

2. The smoke detection system did not always give early warning of fire and subsequently gave false indications of the smoke level.

3. Class C cargo compartments do not effectively control cargo fire after liner burn-through.

i. DuPont released a technical bulletin in December 1985[10] that provided an overview of Halon 1301 effectiveness in total flooding systems, theory of fire extinguishant, physical properties, toxicity, safety, etc.

j. The FAA conducted tests on Halon extinguisher agent behavior in a ventilated small aircraft, as reported in June 1986[11], in which it was concluded that human exposure to Halon 1301 discharge of 3.0-lb capacity is safe for use in general aviation aircraft. Maximum dose calculations were only 30% of recommended human exposure limits.

k. NFPA 12A, Standard on HALON 1301 Fire Extinguishing Systems, 1987 Edition[12] provides minimum requirements for Halon 1301 fire extinguishing systems.

l. The FAA conducted tests on the fire hazards of aerosol cans in aircraft cargo compartments, as reported in December 1989[13]. This report concluded that release of hydrocarbon propellants in aerosol cans during a cargo fire increases the damage potential of luggage fires in cargo compartments and can compromise cargo liner integrity.

m. Kidde Graviner Limited, under contract with the Civil Aviation Authority conducted tests, as reported in March 1991[14], in which it was concluded:

1. A combination of 5% initial knockdown and 3% sustained Halon 1301 concentration can control, but not extinguish, deep-seated fires in (1,000-ft^3) Class C cargo compartments.

2. Increasing the (flight crew) "reaction time" from 1 to 2 min had no significant effect on the ability of the suppression system to control a fire.

3. There is a build-up of combustible gases and potential for explosion where these gases reach their lower explosive limit and are ignited by the heat of a deep-seated fire.

4. Optical flame detectors provided an earlier warning in some cases than a smoke detector, but in some cases did not alarm at all.

5. Total extinguishment of a fire proved extremely difficult.

6. Use of hand-held extinguishers in a cargo fire should be discouraged.

n. The FAA conducted tests on the performance of improved aerosol cans subjected to an aircraft fire, as reported in December 1995[15], in which it was concluded that venting aerosol cans had less severe effects in a cargo fire than nonventing aerosol cans.

o. The FAA conducted tests to evaluate large Class B cargo compartment fire protection, as reported in June 1996[16], in which it was concluded:

1. A crew member with a handheld extinguisher is ineffective in controlling large cargo fires.

2. Fiberglass- and KEVLAR-based fire containment covers are effective at containing fires, even with simulated in-service damage.

3. Fiberglass and aluminum cargo containers can effectively contain test fires.

4. Total flooding with Halon 1301 can control test fires, though exposure to high-temperatures may result.

5. One fire test in this report (Test 14) re-ignited between the Halon knockdown and the metered discharge raising the issue of average versus point concentration, though this issue was not raised in the report's conclusions.

6. The smoke detection system did not always detect test fires quickly.

p. The FAA conducted tests and reported recent research related to cargo compartment fire protection in commercial airplanes in July 1998[17]. Included are reports the FAA conducted on evaluating HFC-125 (pentaflouroethane) and a water mist system used on a bulk-loaded cargo fire. More than twice as much HFC-125 (219 lb) as Halon 1301 (100 lb) was required to control a medium-sized, bulk-loaded simulated cargo compartment fire for 90 min. In a smaller compartment, 10 to 12 gal of water mist were required to control a similar fire for 90 min.

4.1.6 Nitrogen Cargo Fire Suppression Analysis

Use of nitrogen inerting gas to suppress a cargo fire is dependent on reducing the volumetric concentration of oxygen below a maximum level that will not sustain combustion. Such a system has not been demonstrated for airplane cargo compartment applications and it is not known what maximum oxygen (minimum nitrogen) level would be required to ensure an airplane cargo fire was adequately controlled.

Various data support different minimum levels of nitrogen to provide an inerting environment for different flammable materials, but no study was done specifically to evaluate airplane cargo compartment inerting requirements for fire suppression. The U.S. military conducted fuel tank inerting tests and determined the nitrogen inerting concentration limit was 9% oxygen (91% nitrogen)[18]. This limit was based on the threat of small arms fire up to 23-mm high energy incendiary (HEI) rounds. Studies of

fuel tank inerting suggest that 86 to 90% nitrogen concentrations are required to prevent arcing ignition[19, 20, 21]. One study indicated 84% nitrogen concentration is required to prevent hot-surface ignition[21]. Another study provides data that suggests 82% nitrogen is sufficient to limit the flammability of methane and air mixtures[22]. The FAA conducted tests to evaluate fuel tank inerting requirements for ground-based fires[23] and found a range of fire protection from 9% oxygen concentrations up to 18% oxygen concentrations.

It should be noted that the above referenced studies were accomplished on Class B fire material, flammable liquid fuels, whereas cargo generally consists of Class A fire material, such as paper, wood products, and plastic. The International Halon Replacement Working Group (IHRWG) has tentatively identified four fire scenarios for a Halon 1301 replacement. It is expected that once formalized, the replacement agent must meet minimum performance standards equivalent in its effectiveness as Halon 1301 for controlling the following fire scenarios:

a. Bulk fire load of Class A material.

b. Containerized fire load of Class A material.

c. Surface burning fire with Jet A fuel.

d. Exploding aerosol can fire.

For the purposes of this study, analysis to provide OBIGGS inerting capacity in airplane cargo compartments was completed at three different nitrogen inerting levels, 84%, 88%, and 91%, representative of the available study findings for controlling Class B fires. It is recommended that full-scale lab testing be completed to validate inerting requirements in an actual airplane OBIGGS system for cargo fire inerting.

There should be a distinction made between *inerting* and *extinction*. Inerting is creating and maintaining an atmosphere that will not support flame propagation even under the most severe conditions. Extinction is the total suppression of an already

present flame or explosion front. A continuous inerting system in airplane cargo compartments is impractical. Live animal carriage and perishable goods are allowed in cargo compartments and inerting would be counter to minimum ventilation requirements. A cargo fire suppression system must provide extinction of the open flames and, in the case of nitrogen, an inerting environment from the point of extinguishing system discharge adequate to control or suppress any open flames. The dynamics of nitrogen inerting systems on an active Class A material cargo fire are unknown to the writer and would have to be validated through extensive tests before such a system could be approved for commercial airplane applications.

Typical airplane cargo fire suppression systems consist of an initial discharge or knockdown of suppressant, followed by either additional knockdowns or a metered system as necessary to maintain adequate fire suppression concentrations for the required duration. An OBIGGS is likened to the current airplane fire suppression metering systems in that it needs a knockdown discharge adequate to control a fire until the metering system is effective in controlling a fire. As such, for the purposes of this study, it is assumed that there is an initial discharge of suppressant at the same time the OBIGGS is activated to provide steady-state nitrogen concentrations in the cargo compartment. This initial or knockdown fire suppressant discharge will take one of two forms: it will either be nitrogen knockdown or it will be a non-nitrogen fire suppressant knockdown. This results in two models to reflect the two types of systems.

4.1.6.1 Nitrogen Knockdown With OBIGGS Inerting

In the nitrogen knockdown model (fig. 4.0-9) a reservoir of compressed nitrogen would be discharged at the same time that the OBIGGS would be activated to provide a steady-state nitrogen supply sufficient to control a fire. The nitrogen knockdown/OBIGGS combination is modeled in figure 4.0-10 and is graphically represented in figure 4.0-11. Tables 4.0-6 (95% pure nitrogen from OBIGGS) and 4.0-7 (98% pure nitrogen from OBIGGS) tabulate minimum OBIGGS flow rates for ensuring the indicated maximum O_2 concentration when integrated with a nitrogen knockdown system. The model makes the following assumptions:

a. The cargo compartment nitrogen level at the start is the same as that in the atmosphere, 79%.

b. Nitrogen concentrations to knock down (extinguish) the flame are the same level as that required to provide continued control over the fire.

c. Sufficient nitrogen is discharged in a knockdown system to reach minimum nitrogen inerting concentrations within 1 min.

d. OBIGGS provides either 95% pure nitrogen or 98% pure nitrogen.

e. OBIGGS flow rate provides sufficient nitrogen to account for a compartment leakage rate of the basic airplane with the Halon system plus the OBIGGS nitrogen flow rate.

f. Cargo compartment airflow leakage previously demonstrated with Halon systems are representative of airplanes with an OBIGGS.

It should be noted that the resultant pressure rise and its effect on cargo liners for a rapid discharge of nitrogen into a cargo compartment that would be necessitated with a nitrogen (or any other high-volume gas) knockdown system has not been evaluated. Such effects would be part of the design considerations for application on an airplane.

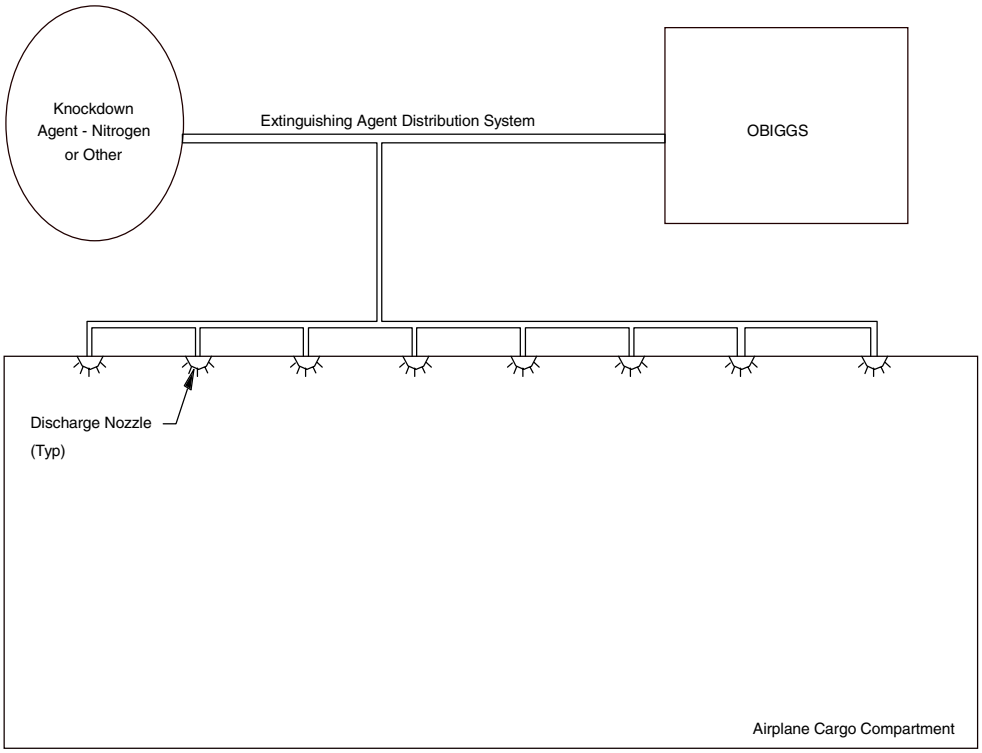

Figure 4.0-9. OBIGGS Cargo Fire Suppression System Schematic

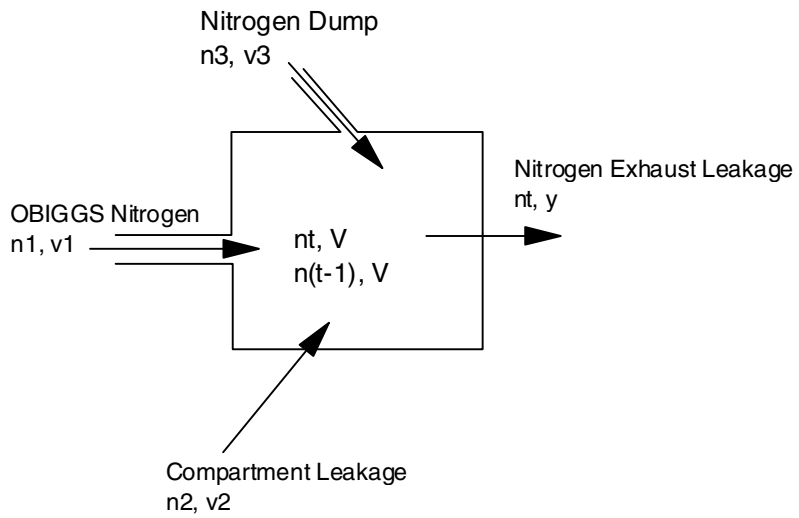

n1 = Nitrogen purity from OBIGGS (95% or 98% for this study)
v1 = OBIGGS flow rate (sft^3/m)
n2 = Nitrogen purity in air (79%)
v2 = Cargo compartment leakage rate from airplane Halon tests (ft^3/m)
n3 = Nitrogen purity in nitrogen knockdown (99% for this study)
v3 = Volumetric flow rate from nitrogen knockdown (ft^3/m)
nt = Nitrogen concentration in compartment volume at time t
n(t-1) = Nitrogen concentration in compartment volume at (t-1)
V = Compartment volume (ft^3)
y = Total compartment exhaust leakage (ft^3/m)

t-1 = One time increment

A nitrogen flow balance equation of the OBIGGS model yields:

$$n1v1(t-1) + n2v2(t-1) + n3v3(t-1) + n(t-1)V = ntV + nty(t-1)$$

A flow balance of the compartment air and nitrogen flows yields:

$$y = v1 + v2 + v3$$

Substituting:

$$nt = \frac{(t-1)(n1v1 + n2v2 + n3v3) + n(t-1)v}{V + (t-1)(v1 + v2 + v3)}$$

Figure 4.0-10. Nitrogen Knockdown With OBIGGS Control Volume Model

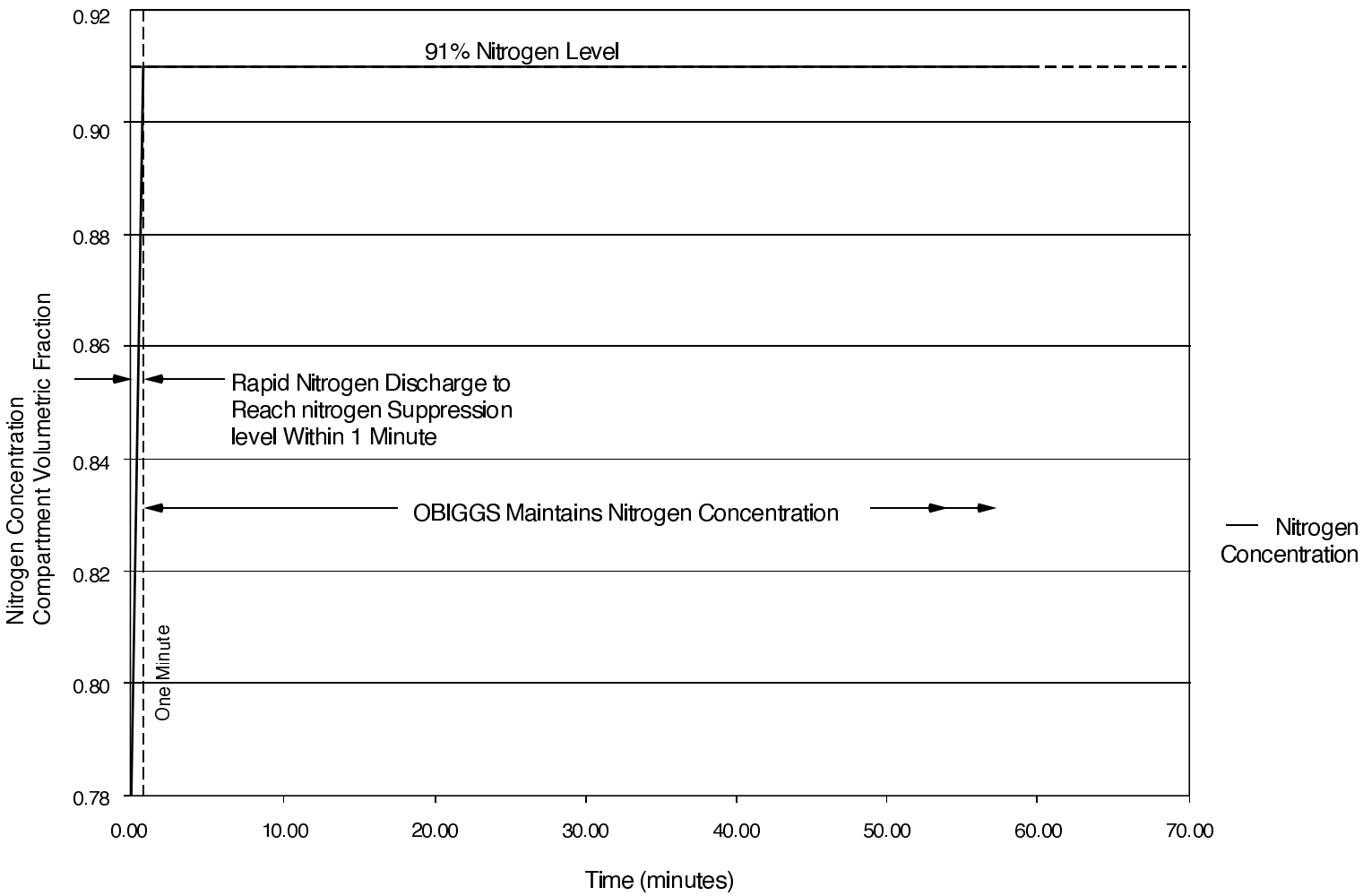

Figure 4.0-11. Typical Total Nitrogen Fire Suppression Model

The analysis is completed for both a volumetric-control and a mass-flow-control model. Typically, airplane cargo fire protection systems requirements have been defined by volumetric control. Figure 4.0-12 (95% nitrogen from OBIGGS) and Figure 4.0-13 (98% nitrogen from OBIGGS) provide an overall graphical assessment of a nitrogen knockdown/OBIGGS volumetric capacity requirements for installation on the fleet of Boeing airplanes in this study. Depending on OBIGGS efficiency, as little as 5 sft^3/m (0.4 lbm/m) OBIGGS flow rate delivering 98% pure nitrogen on a 737-800 airplane is required if 84% nitrogen is sufficient to control a fire, or as much as 297 sft^3/m (23.2 lbm/m) OBIGGS flow rate delivering 95% pure nitrogen is required if 91% nitrogen is required to control a fire. The 747-400 Combi airplane main deck cargo compartment would require even greater OBIGGS nitrogen flow rates. These numbers are provided to give a range of reasonable nitrogen flow rate estimates for the various model airplanes.

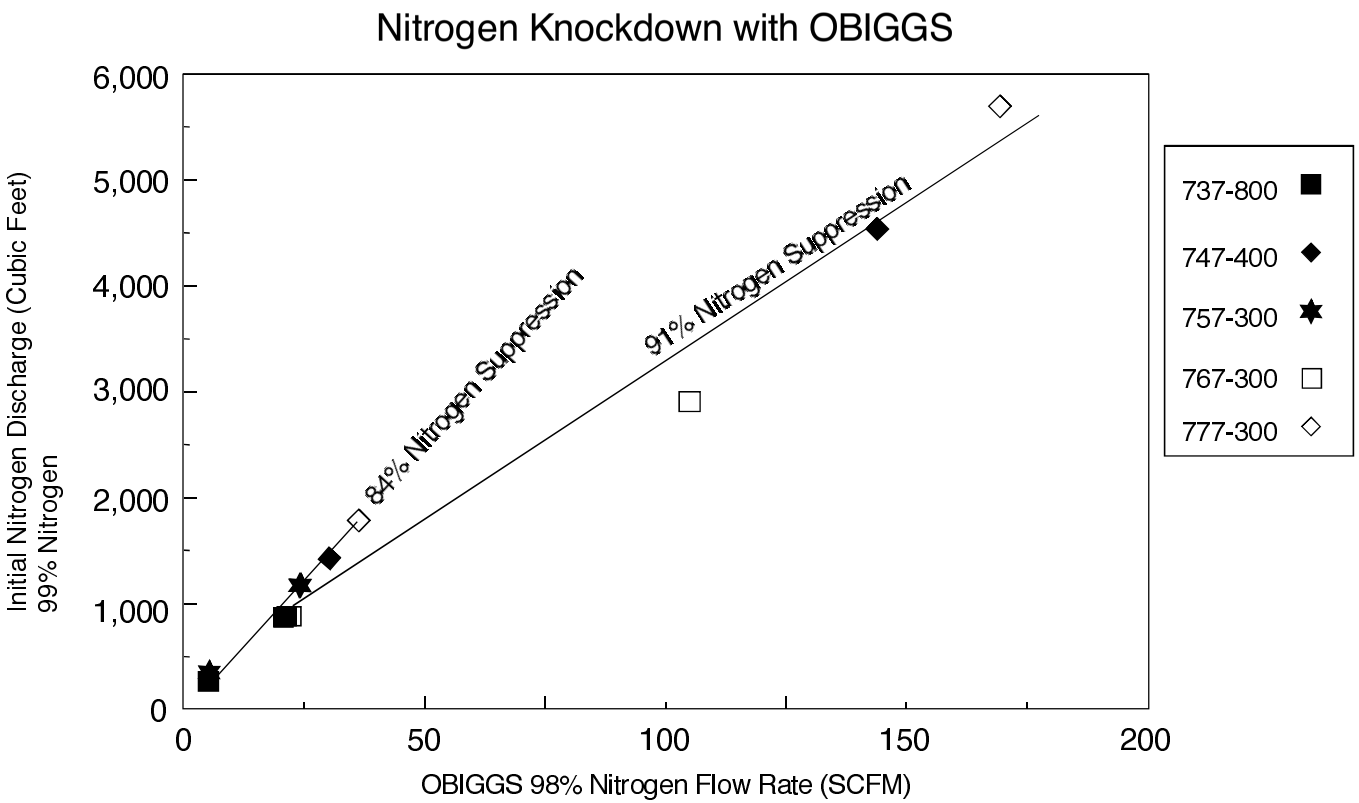

Figure 4.0-12. Overall Nitrogen Fire Suppression System Requirements

Table 4.0-6. Nitrogen Knockdown and 95% OBIGGS Analysis

Volumetric Flow Rate

Airplane model	84% nitrogen inerting		88% nitrogen inerting		91% nitrogen discharge	
	Nitrogen dump (STP ft^3)	OBIGGS metered rate (sft^3/m)	Nitrogen dump (STP ft^3)	OBIGGS metered rate (sft^3/m)	Nitrogen dump (STP ft^3)	OBIGGS metered rate (sft^3/m)
737-800	275	6	571	16	872	36
747-400	1427	39	2958	108	4504	252
747-400MD	2971	435	6037	1228	8820	2965
757-300	371	7	771	18	1177	42
767-300	882	28	1826	79	2777	183
777-300	1788	45	3713	128	5639	297

Mass Flow Rate

Airplane model	84% nitrogen inerting		88% nitrogen inerting		91% nitrogen discharge	
	Nitrogen dump (lbm)	OBIGGS metered rate (lbm/m)	Nitrogen dump (lbm)	OBIGGS metered rate (lbm/m)	Nitrogen dump (lbm)	OBIGGS metered rate (lbm/m)
737-800	22	.47	45	1.3	68	2.8
747-400	112	3.0	231	8.4	352	19.7
747-400MD	232	34	472	96	689	232
757-300	29	.55	60	1.4	92	3.3
767-300	69	2.2	143	6.2	217	14.3
777-300	140	3.5	290	10	441	23.2

Nitrogen knockdown with OBIGGS metered analysis
95% nitrogen from OBIGGS
99% nitrogen in knockdown

Tables 4.0-6 and 4.0-7 also show the quantity of nitrogen required in the knockdown to provide adequate suppressant concentration. When compared to Halon 1301, similar weights of nitrogen are required if 84% minimum nitrogen concentration after nitrogen knockdown is required to suppress a cargo fire. If 91% minimum nitrogen concentration is required to suppress a cargo fire, three to four times the weight of nitrogen is needed. The knockdown analysis may be somewhat conservative in that it

assumes that the nitrogen concentration throughout the compartment quickly reaches equilibrium, where in the actual design, it may be viable to optimize the distribution system to displace the air in the compartment with nitrogen more effectively. However, the size and shape of the cargo compartment may limit the level of optimization and the conservative model is deemed appropriate for this study.

Table 4.0-7. Nitrogen Knockdown and 98% OBIGGS Analysis

Volumetric Flow Rate

	84% nitrogen inerting		88% nitrogen inerting		91% nitrogen discharge	
Airplane model	Nitrogen dump (STP ft^3)	OBIGGS metered rate (sft^3/m)	Nitrogen dump (STP ft^3)	OBIGGS metered rate (sft^3/m)	Nitrogen dump (STP ft^3)	OBIGGS metered rate (sft^3/m)
737-800	275	5	572	11	876	21
747-400	1428	30	2966	76	4540	144
747-400MD	2982	342	6123	860	9214	1638
757-300	371	5	772	13	1183	24
767-300	882	22	1832	55	2903	105
777-300	1786	36	3710	90	5682	170

Mass Flow Rate

	84% nitrogen inerting		88% nitrogen inerting		91% nitrogen discharge	
Airplane model	Nitrogen dump (lbm)	OBIGGS metered rate (lbm/m)	Nitrogen dump (lbm)	OBIGGS metered rate (lbm/m)	Nitrogen dump (lbm)	OBIGGS metered rate (lbm/m)
737-800	22	.4	45	.9	68	1.6
747-400	112	2.4	232	5.9	355	11.3
747-400MD	233	26.7	478	67.2	720	128
757-300	29	.4	60	1.0	92.4	1.9
767-300	69	1.7	143	4.3	227	8.2
777-300	140	2.8	290	7.0	444	13.3

Nitrogen knockdown with OBIGGS metered analysis
98% nitrogen from OBIGGS
99% nitrogen in knockdown

4.1.6.2 Hybrid of Non-Nitrogen Knockdown With OBIGGS Inerting

The second model assumes a non-nitrogen knockdown in conjunction with an OBIGGS. The hybrid model would be similar to the nitrogen knockdown model of figure 4.0-9, except the nitrogen knockdown reservoir would be a non-nitrogen knockdown reservoir. The non-nitrogen knockdown is discharged at the same time the OBIGGS is activated, when a fire is detected. The non-nitrogen knockdown/OBIGGS hybrid is modeled in figure 4.0-13 and is graphically represented in figure 4.0-14. Table 4.0-8 (84% nitrogen required fire suppression), table 4.0-9 (88% nitrogen required for fire suppression), and table 4.0-10 (91% nitrogen required for suppression) tabulate the required OBIGGS flow rates to reach the indicated minimum nitrogen concentration within the specified time period (10, 20, or 30 min). This model assumes that the

a. Non-nitrogen knockdown provides adequate fire suppression for a finite period of time (10, 20, or 30 min depending on the model) before its effectiveness has been diluted and nitrogen from OBIGGS is required to suppress the cargo fire.

b. The knockdown fire suppression agent works independently of OBIGGS. Stand-alone minimum concentrations of at least one of the fire suppression agents is required at all times for adequate fire control.

c. The cargo compartment nitrogen level at the start is the same as that in the atmosphere, 79%.

d. Adequate nitrogen suppression concentration is reached solely through OBIGGS.

e. OBIGGS provides either 95% pure nitrogen or 98% pure nitrogen.

f. OBIGGS flow rate provides sufficient nitrogen to account for a compartment leakage rate of the basic airplane with the Halon system plus the OBIGGS nitrogen flow-rate.

g. Cargo compartment airflow leakage previously demonstrated with Halon systems are representative of airplanes with an OBIGGS.

The hybrid system is inherently inefficient. The OBIGGS nitrogen flow rate asymptotically approaches a concentration greater than that minimally required to control a fire. A comparison shows the nitrogen flow rate capacity from OBIGGS must be at least 30% greater for a non-nitrogen knockdown system that provides 30 min of fire suppression than for a nitrogen knockdown system with OBIGGS. The OBIGGS capacity must be significantly greater still if the non-nitrogen knockdown is less than 30 min. For the purposes of this study, it was assumed the two fire suppression agents are independent in the fire suppression capabilities and each must meet minimum concentrations for a specified time. Whether that is too conservative would have to be validated in a test program.

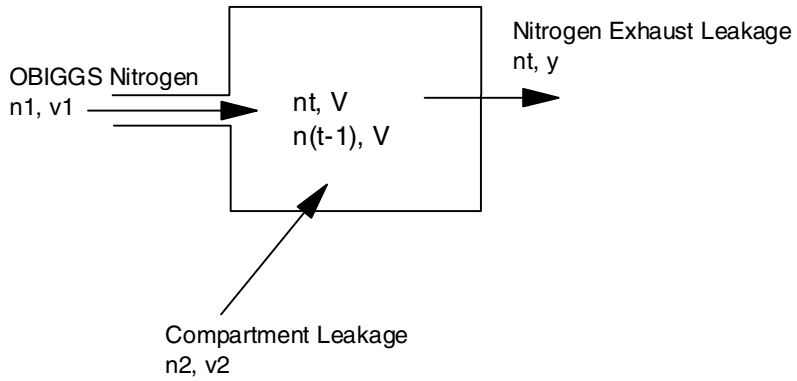

n1 = Nitrogen purity from OBIGGS (95% or 98% for this study)
v1 = OBIGGS flow rate (sft^3/m)
n2 = Nitrogen purity in air (79%)
v2 = Cargo compartment leakage rate from airplane Halon tests (ft^3/m)
nt = Nitrogen concentration in compartment volume at time t
n(t-1) = Nitrogen concentration in compartment volume at (t-1)
V = Compartment volume (ft^3)
y = Total compartment exhaust leakage (ft^3/m)

t-1 = One time increment

A nitrogen flow balance equation of the OBIGGS model yields:

$$n1v1(t-1) + n2v2(t-1) + n(t-1)V = ntV + nty(t-1)$$

A flow balance of the compartment air and nitrogen flows yields:

$$y = v1 + v2$$

Substituting:

$$nt = \frac{(t-1)(n1v1 + n2v2) + n(t-1)v}{V + (t-1)(v1 + v2)}$$

Figure 4.0-13. OBIGGS Control Volume Model (Non-Nitrogen Knockdown)

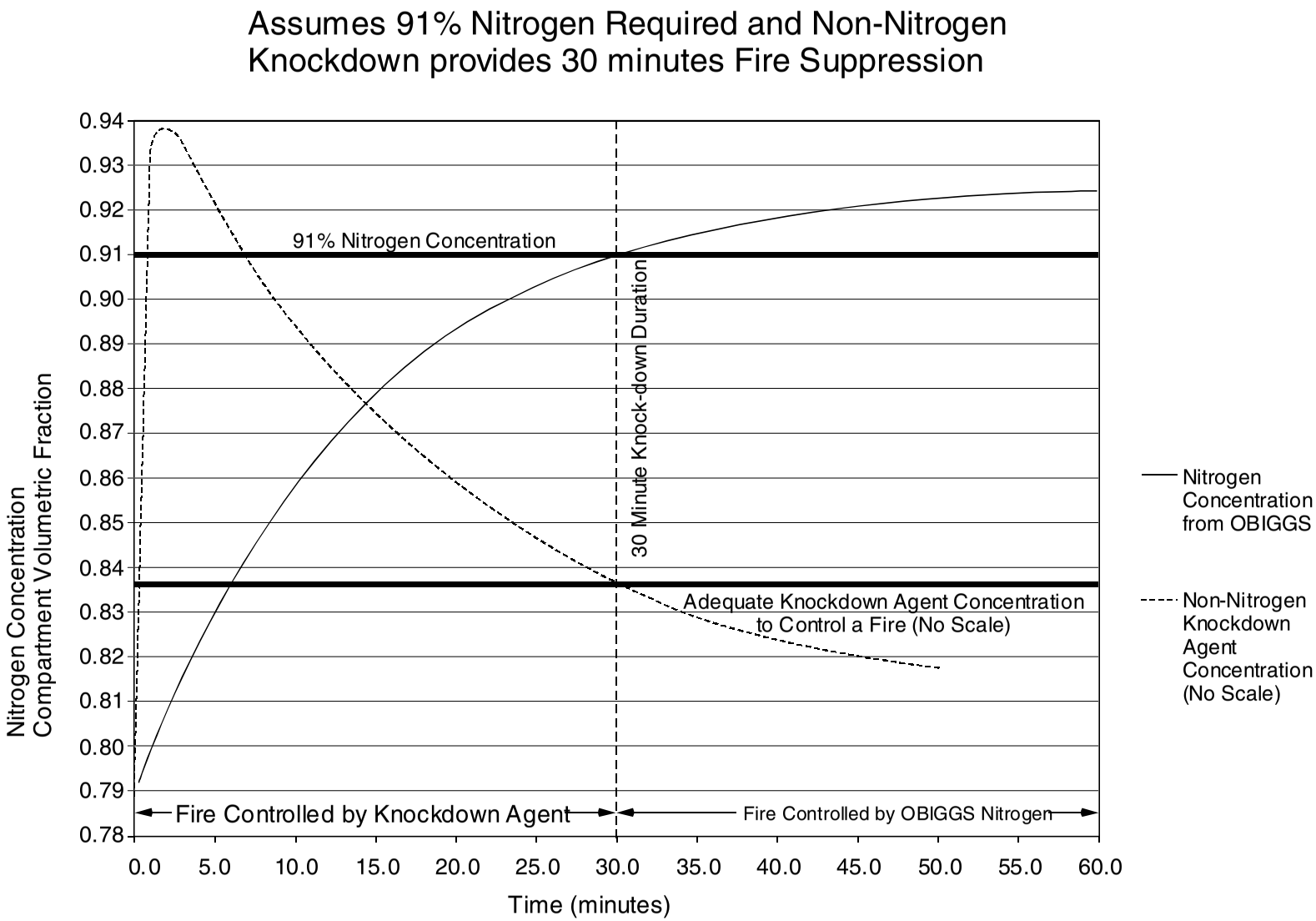

Figure 4.0-14. Typical Nitrogen Hybrid Fire Suppression System Model

Table 4.0-8. OBIGGS Hybrid and 84% Nitrogen Fire Suppression

Volumetric Flow Rate

	10 min		20 min		30 min	
Airplane model	95% N_2 OBIGGS (sft^3/m)	98% N_2 OBIGGS (sft^3/m)	95% N_2 OBIGGS (sft^3/m)	98% N_2 OBIGGS (sft^3/m)	95% N_2 OBIGGS (sft^3/m)	98% N_2 OBIGGS (sft^3/m)
737-800	39	32	21	17	15	12
747-400	207	168	113	92	83	67
747-400 Lower MD	653	526	485	387	448	355
757-300	52	43	28	23	20	16
767-300	130	106	73	59	54	44
777-300	235	209	130	114	95	83

Mass Flow Rate

	10 min		20 min		30 min	
Airplane model	95% N_2 OBIGGS (lbm/m)	98% N_2 OBIGGS (lbm/m)	95% N_2 OBIGGS (lbm/m)	98% N_2 OBIGGS (lbm/m)	95% N_2 OBIGGS (lbm/m)	98% N_2 OBIGGS (lbm/m)
737-800	3.0	2.5	1.6	1.3	1.2	.9
747-400	16.2	13.1	8.8	7.2	6.5	5.2
747-400 Lower MD	51.0	41.1	37.9	30.2	35	27.7
757-300	4.1	3.4	2.2	1.8	1.6	1.3
767-300	10.2	8.3	5.7	4.6	4.2	3.4
777-300	18.4	16.3	10.2	8.9	7.4	6.5

Standardized OBIGGS nitrogen flow rates to provide minimum 84% nitrogen concentrations within specified time assuming 79% nitrogen air initial conditions.

Table 4.0-9. OBIGGS Hybrid and 88% Nitrogen Fire Suppression

Volumetric Flow Rate

	10 min		20 min		30 min	
Airplane model	95% N_2 OBIGGS (sft^3/m)	98% N_2 OBIGGS (sft^3/m)	95% N_2 OBIGGS (sft^3/m)	98% N_2 OBIGGS (sft^3/m)	95% N_2 OBIGGS (sft^3/m)	98% N_2 OBIGGS (sft^3/m)
737-800	87	67	47	37	34	26
747-400	464	357	259	198	192	146
Lower 747-400 MD	1585	1179	1278	917	1235	871
757-300	116	90	62	48	45	34
767-300	293	226	167	127	126	95
777-300	528	444	296	245	221	179

Mass Flow Rate

	10 min		20 min		30 min	
Airplane Model	95% N_2 OBIGGS (lbm/m)	98% N_2 OBIGGS (lbm/m)	95% N_2 OBIGGS (lbm/m)	98% N_2 OBIGGS (lbm/m)	95% N_2 OBIGGS (lbm/m)	98% N_2 OBIGGS (lbm/m)
737-800	6.8	5.2	3.7	2.9	2.7	2.0
747-400	36.3	27.9	20.2	15.5	15	11.4
Lower 747-400 MD	123.8	92.1	99.8	71.6	96.5	68.0
757-300	9.1	7.0	4.8	3.8	3.5	2.7
767-300	22.9	17.7	13.0	9.9	9.8	7.4
777-300	41.2	34.7	23.1	19.1	17.3	14.0

Standardized OBIGGS nitrogen flow rates to provide minimum 88% nitrogen concentrations within specified time assuming 79% nitrogen air initial conditions.

Table 4.0-10. OBIGGS Hybrid and 91% Nitrogen Fire Suppression

Volumetric Flow Rate

	10 min		20 min		30 min	
Airplane model	95% N_2 OBIGGS (sft^3/m)	98% N_2 OBIGGS (sft^3/m)	95% N_2 OBIGGS (sft^3/m)	98% N_2 OBIGGS (sft^3/m)	95% N_2 OBIGGS (sft^3/m)	98% N_2 OBIGGS (sft^3/m)
737-800	149	106	83	58	62	42
747-400	801	565	462	318	355	238
Lower 747-400 MD	3162	2003	2876	1675	2866	1641
757-300	198	141	108	76	79	55
767-300	509	357	301	205	237	157
777-300	913	701	530	392	409	292

Mass Flow Rate

	10 min		20 min		30 min	
Airplane model	95% N_2 OBIGGS (lbm/m)	98% N_2 OBIGGS (lbm/m)	95% N_2 OBIGGS (lbm/m)	98% N_2 OBIGGS (lbm/m)	95% N_2 OBIGGS (lbm/m)	98% N_2 OBIGGS (lbm/m)
737-800	11.6	8.3	6.5	4.5	4.8	3.3
747-400	62.6	44.1	36.1	24.8	27.7	18.6
Lower 747-400 MD	247	156.5	224.7	130.9	223.9	128.2
757-300	15.5	11.0	8.4	5.9	6.2	4.3
767-300	39.8	27.9	23.5	16.0	18.5	12.3
777-300	71.3	54.8	41.4	30.6	32.0	22.8

Standardized OBIGGS nitrogen flow rates to provide minimum 91% nitrogen concentrations within specified time assuming 79% nitrogen air initial conditions.

4.2 Electronic Equipment Bay Fire Protection

The electronic equipment (E/E) bay on Boeing airplanes have smoke detection systems, but do not have fire extinguishing systems. In the event of an E/E bay smoke condition, typically overheated equipment, an overboard valve opens and smoke is exhausted outside the airplane. Equipment installed in the E/E bay, or any other area on the airplane, must meet flammability requirements for which it is demonstrated the equipment will not sustain or propagate a fire (sec. 4.1.3.5.7).

Figure 4.0-15. Typical E/E Bay (1)

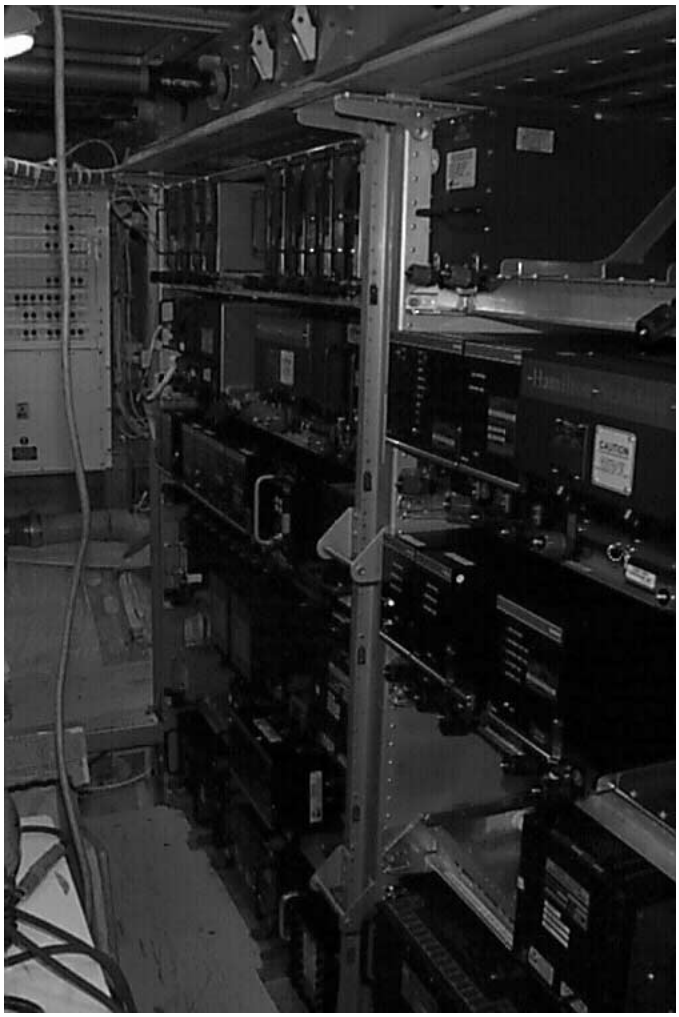

Figure 4.0-16. Typical E/E Bay (2)

4.3 Lavatory Extinguishing System Bottles

Airplane lavatories are required by FAR to have an extinguishing bottle in the waste receptacles. Lavatories are required to have a smoke detector, but are independent of the fire bottles. Typical fire bottles have a eutectic seal that releases Halon upon heat build-up within the receptacle. The bottles are not discharged through the smoke detector or manual action. Each bottle typically contains 100 to 150 g of Halon 1301, which has a specific volume of 3.08 ft^3/lb at 6,000-ft cabin altitude and 60°F. The capacity of lavatory waste receptacles range from 1 to 2 ft^3. The quantity of nitrogen required to control a lavatory waste receptacle fire is not known. The specific volume of nitrogen is 16.0 ft^3/lb at 6,000-ft cabin altitude and 60°F. An OBIGGS for a lavatory

waste receptacle would require some sort of receptacle fire detection system that activates OBIGGS and then a minimum nitrogen flow rate that provides adequate fire suppression within a limited time period.

4.4 Portable Hand-Held Extinguishers

Airplanes are required by the FARs to have a minimum number of portable fire extinguishers, some of a specific type and at specific locations. Portable fire extinguishers on Boeing airplanes typically contain either Halon 1211 (bromochlorodifluoromethane, CBrClF2) or a water/glycol solution. The minimum quantity and location of portable fire extinguishers is governed by FAR 25.851(a). Boeing airplanes typically have excess portable fire extinguishers and are located to optimize visibility and access. The Halon 1211 portable extinguishers are located near exits, near crew rests, in the flight deck, and at other convenient locations. The water/glycol portable extinguishers are typically located near wardrobe closets and crew rests. Water/glycol extinguishers are not recommended for use on electrical fires.

5.0 FUEL SYSTEM, PROPULSION FIRE PROTECTION, AND FUEL TANK INERTING REQUIREMENTS

5.1 Introduction

The Boeing Company, as well as most other airplane manufacturers, uses Halon 1301 as the extinguishing agent for fire suppression in all of the designated propulsion fire zones (engine, nacelle, APU). The feasibility of using nitrogen (N_2) provided by an OBIGGS system, for fire suppression (inerting) in fire zones and centerwing tanks will be addressed. The comparative levels of the safety, functional, reliability, and maintainability requirements and costs of the current fire protection systems will be estimated. Any new fire protection system or agent would have to meet these requirements as a minimum to be feasible and certifiable for installation on any commercial passenger jet airplane.

There are no current Federal Aviation Regulations requiring fuel tank inerting on commercial airplanes. The Boeing Company design philosophy has been and will continue to be to preclude the presence of potential ignition sources from the fuel tanks. For the purpose of this study, OBIGGS or nitrogen FAA certification requirements for fuel tank inerting will be assumed and based upon the best information currently available, which is predominantly from U.S. military combat aircraft. Additional data, information, and guidance have been taken from the information and conclusions in the final report of the Aviation Rulemaking Advisory Committee (ARAC) Fuel Tank Harmonization Working Group[23].

Fuel tank inerting has been continually evaluated for military aircraft and vehicles since World War II. Some of the inerting methods and materials evaluated have included inerting fuel tanks with carbon dioxide (CO_2), nitrogen gas, Halon, combustion products including engine exhaust, reticulated foam, and expanded metal products. A partial summary is shown in table 5.0-1.

Table 5.0-1. Partial Summary of Fuel Tank Protection Systems on Military Aircraft

			OBIGGS		
Reticulated Foam	LN_2	Halon	Stored gas N_2	On-demand N_2	TALON (N_2 and O_2)
C-130, F-18, F-15, P3	C-5	F-16, A6E, F-117	C-17	V-22, F-22, F-117, Helicopters	C-17 (Study)

The primary impetus behind these military systems and their requirements is to reduce the loss of aircraft and helicopters to hostile small arms fire, up to 23-mm caliber. The loss of combat aircraft from hostile munitions that are designed to ignite fuel tanks is the number one cause of combat losses, and thus extensive measures for combat aircraft outweigh the increased risks posed by these systems. However, the military, even in more recent acquisitions has not generally incorporated these measures in aircraft that are not exposed to hostile munitions.

Combat requirements have led to the development of several of the above mentioned fuel tank protection methods, including nitrogen inerting using stored gaseous or liquid nitrogen (LN_2), chemical nitrogen generators, and OBIGGS (N2) type systems.

During the 1970s the National Transportation and Safety Board (NTSB) and the FAA conducted a flight test of a LN_2 fuel tank inerting system on a DC-9 airplane[24]. This flight test demonstrated that an OBIGGS was capable of successfully inerting the fuel tanks during all phases of the flight profile. At that time OBIGGS technology was not viable for use on commercial airplanes because the expected reliability did not meet commercial standards, the technology was considered immature, and an unfavorable cost-to-benefit ratio due to the high system weight and procurement cost.

5.1.1 Scope

This section will provide the Federal Aviation Requirements and airframe manufacturer design requirements for current fire protection in fire zones and flammable leakage zones. The section also presents a discussion of the fire protection systems that are in current compliance with these requirements. This data will then become the basis for assessing the feasibility of providing an inerting gas

(nitrogen) with an OBIGGS. In order to do this, certain assumptions and estimates must be made in light of a lack of manufacturer and federal requirements for commercial passenger jet aircraft.

The groundwork for assessing the viability or feasibility of using an OBIGGS for fuel tank inerting requires a description and written narrative of the fuel system function and requirements. It is absolutely necessary that any fuel tank inerting system considered for study or evaluation must not interfere with the existing function, reliability, and maintainability of the fuel system and its components.

The current requirements for the actual suppression or extinguishing of a fire are presented, where applicable. There are already detection systems requirements for the fire suppression systems that are currently installed; for example, in the engine nacelles and APU bay. Additional detection systems that may be required for OBIGGS and airplane systems interfaces are presented and discussed. Caution must be exercised as the implementation of an inert gas system could potentially have an impact on existing airplane fuel and safety systems.

5.2 Fire Protection Systems: General Requirements

There are a number of existing requirements for protection against fires on the airplane. In this section, the fire protection requirements for fire zones, flammable zones, and flammable leakage zones are discussed as identified in the applicable FARs.

5.2.1 Typical Aircraft Safety Zones

Figure 5.0-1 shows typical aircraft safety zones. The zones include the (1) fire zone, (2) flammable zone, and (3) flammable leakage zone.

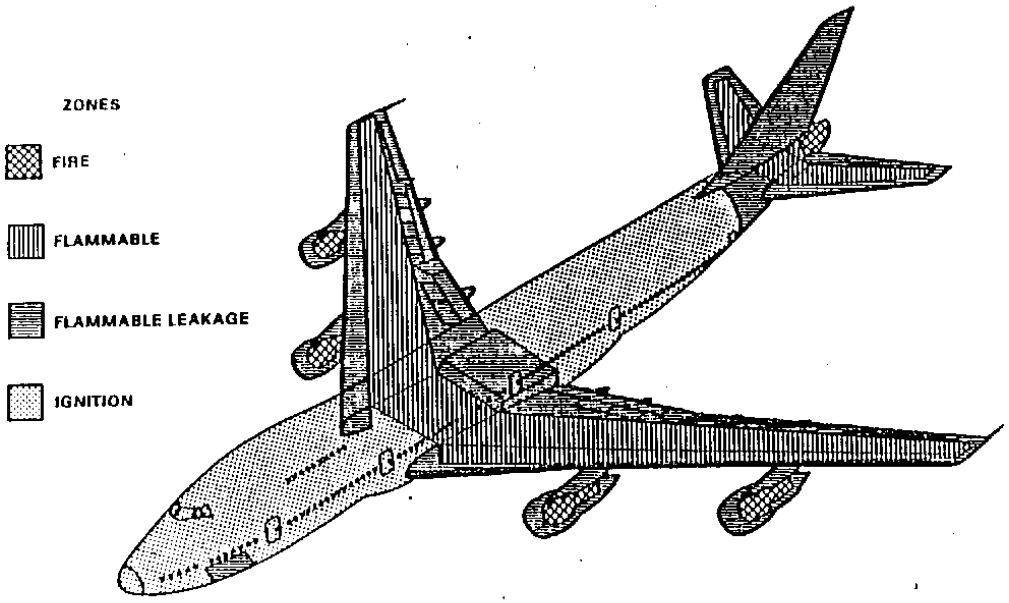

Figure 5.0-1. Fire Protection Zones (1)

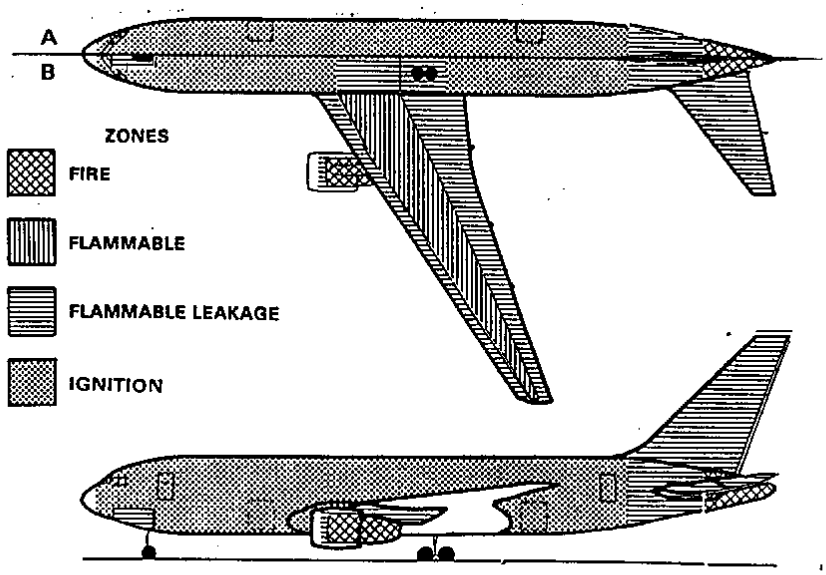

FIRE PROTECTION ZONES
A. ABOVE CABIN FLOOR
B. BELOW CABIN FLOOR

Figure 5.0-2. Fire Protection Zones (2)

5.2.2 Fire Zones: Engine Nacelle and APU Bay

A *fire zone* is defined as an area where fuel and/or flammable vapors and ignition sources are normally present.

FAR 25.1181 designates the fire zones to be the engine nacelle, APU compartment, and any compartment containing a fuel-burning heater or other combustion equipment.

The fire zone fire protection requirements are defined in FARs 25.1181 through 25.1207. The basic requirement is that the fire protection system must be capable of extinguishing fires from all sources within the fire zone. Engine nacelle fire extinguishing systems typically provide a “two-shot” application of suppressant and the APU bay only provides a “one-shot” system.

Compliance with applicable FARs for any system must be thoroughly demonstrated by full-scale tests with representative worst conditions, by similarity of design of a currently certified system, or through comprehensive analysis. However, if there is any change in the configuration of an engine, nacelle, nacelle airflow, strut, extinguishing agent, and so forth, a full-scale test is the most usual method of demonstrating that requirements for the type certificate and certification basis have been met.

The basis for demonstrating or showing compliance to FAR 25.1207 is outlined in FAA AC 20-100[25], in which specific guidelines are established regarding suppression agent concentration (and how to measure it), location, and duration. If Halon 1301 (CF_3Br) is used as the suppressant agent, the minimum agent concentration is 6% by volume for a minimum of 0.5 sec for all samples, simultaneously. Because all of the fire protection systems for engine nacelles and APU bays currently use Halon 1301 this is the certification basis for current aircraft.

5.2.3 Flammable Leakage Zone: Fire Protection Requirements

A *flammable leakage zone* is defined as a location where fuel or fuel vapors may be present but ignition sources are not usually present.

FAR 25.863 requires that in a zone where flammable fluids or vapors might potentially escape from the fuel/fluid system there must be a means to minimize the probability of ignition of these fluids and vapors. This area is called a flammable leakage zone. The zones identified as flammable leakage zones are the wing leading and trailing edges (i.e., the area in front of front spars and behind the rear spars of the wings).

Compliance to this FAR is by passive measures, which include natural ventilation and drainage to minimize buildup of vapors; proper electrical bonding and grounding; explosion-proof components; and service history and experience.

5.2.4 Flammable Zone: Fuel Tanks

FAR 25.901 (c) states that for each power plant and auxiliary power unit installation, it must be established that no single failure or malfunction or probable combination of failures will jeopardize the safe operation of the airplane except that failure of structural elements need not be considered if the probability of such failure is extremely remote.

FAR 25.951 requires that each fuel system must be constructed and arranged to ensure proper fuel flow to the engines and APU under all operating conditions and cannot result in a flameout of the engine.

FAR 25.981, titled Fuel Tank Temperatures, requires that the manufacturer determine the highest temperature allowing safe margin below the lowest expected auto ignition temperature of the fuel in the fuel tanks.

FAR 25.1309 states that any system must be designed to perform the intended function under any foreseeable operating condition and that the probability for failure that would prevent continued safe flight and landing be extremely improbable ($<10^{-9}$ per flight hr).

The Boeing Company has established its own dispatch reliability and safety of flight requirements that require system and component reliability factors that could be more stringent than those required in the FARs. Any system that interfaces with the fuel system (including the tanks) must not cause nor contribute to any reduction in safety

or reliability. These considerations would also include the fuel system, any electrical systems, and the structure.

There are no current requirements for inerting the fuel tanks on commercial airplanes.

The aircraft industry ARAC report notes that the wing tanks operating with Jet A fuel have demonstrated an acceptable safety record, during the past 40+ years.

The ARAC findings suggest that reducing flammability exposure only in center wing tanks subject to outside heat sources (i.e., air conditioning packs and equipment) may benefit and provide a level of safety enhancement.

A study objective may be to reduce the center fuel tank flammability to a level currently existing in wing fuel tanks. Inerting or timely inerting of the noted tanks to or below 9% oxygen content will be studied.

5.2.5 Conclusions From the Fuel Tank Harmonization Working Group[26]

During 1998 the FAA tasked ARAC to form a Fuel Tank Harmonization Working Group (FTHWG) to review the requirements for fuel system safety on commercial airplanes and to conduct an assessment of feasible technologies that may eliminate or minimize flammable vapors in the fuel system. Ignition sources were not part of the scope of the work because ignition sources were to be considered a separate effort. The conclusions drawn from the ARAC report regarding fuel tank inerting are:

OBIGGS and other nitrogen generating systems would achieve the goal of reducing the flammability of fuel tanks but would cause the airline industry to incur a cost of more than $20 billion over the next 10 yr and, in addition, would be difficult (and very costly) to retrofit in current airplanes. Benefits for safety enhancements were estimated, based on FAA guidelines, as $2 billion.

Ground-based inerting (i.e., nitrogen from a ground service cart) would also achieve the flammability goal but potentially cost significantly less than OBIGGS. Further study was recommended.

Wing tanks operating with Jet A fuel have demonstrated an acceptable safety record, during the past 40+ years.

Wing tanks have been identified as a target for the comparable center wing tanks safety level performance.

The exposure analysis revealed that center wing tanks without heat sources have the similar magnitude of exposure (level of safety) as the wing tanks.

The ARAC findings suggest that reducing flammability exposure only in center wing tanks subject to outside heat sources (e.g., air conditioning packs) may benefit and provide a level of safety enhancement. As a consequence, for the study, the OBIGGS would inert the center wing tank only and would not be used to inert the wing tanks.

Practical means of achieving cost-effective reduction in flammability exposure of center wing tanks will be primary considerations of the study.

5.3. Fire Protection System Description: General

As previously noted in section 5.2.2, the fire extinguishing system for engine nacelles and APU bays use Halon 1301 as a fire suppression agent. The primary reasons Halon 1301 is so widely used as a fire suppression agent is the abundance of data available demonstrating its fire suppression capability, relatively non-toxic, minimum system weight, and well-established compliance requirements within the FAA and industry.

5.3.1 Engine Nacelle Description

Typical engine nacelle and APU bay fire detection, overheat detection, and fire extinguishing systems are shown in figures 5.0-3 through 5.0-21.

- Overview
- Engine Fire and Overheat Detection and Warning
- Engine Fire Extinguishing
- APU Fire Detection and Warning
- APU Fire Extinguishing
- Wheel Well Fire and Duct Leak Detection

Figure 5.0-3. Fire Protection Outline

Overview

- The fire protection system includes detection systems and extinguishing systems. A number of indicators on the flight deck assist in fire and overheat detection and warning.

Figure 5.0-4. Fire Protection Overview (1)

Flight Deck Annunciation	Master Caution and Warning	EICAS	Aural Alarm	Discrete Fire Warning	Discrete Identification	Fire Extinguishing Operation
Engine and Strut	Yes	Yes	Yes	Yes	Yes	Manual
APU	Yes	Yes	Yes	Yes	Yes	Manual/ Automatic
Wheel Well	Yes	Yes	Yes	Yes	Yes	Extend gear
Duct Leaks	Yes	Yes	Yes	No	Yes	None

Figure 5.0-5. Fire Protection Overview (2)

ENGINE

Each engine has dual-loop overheat and dual-loop fire detectors. Two fire extinguisher bottles can be directed to either engine.

Figure 5.0-6. Engine Fire and Overheat Detection

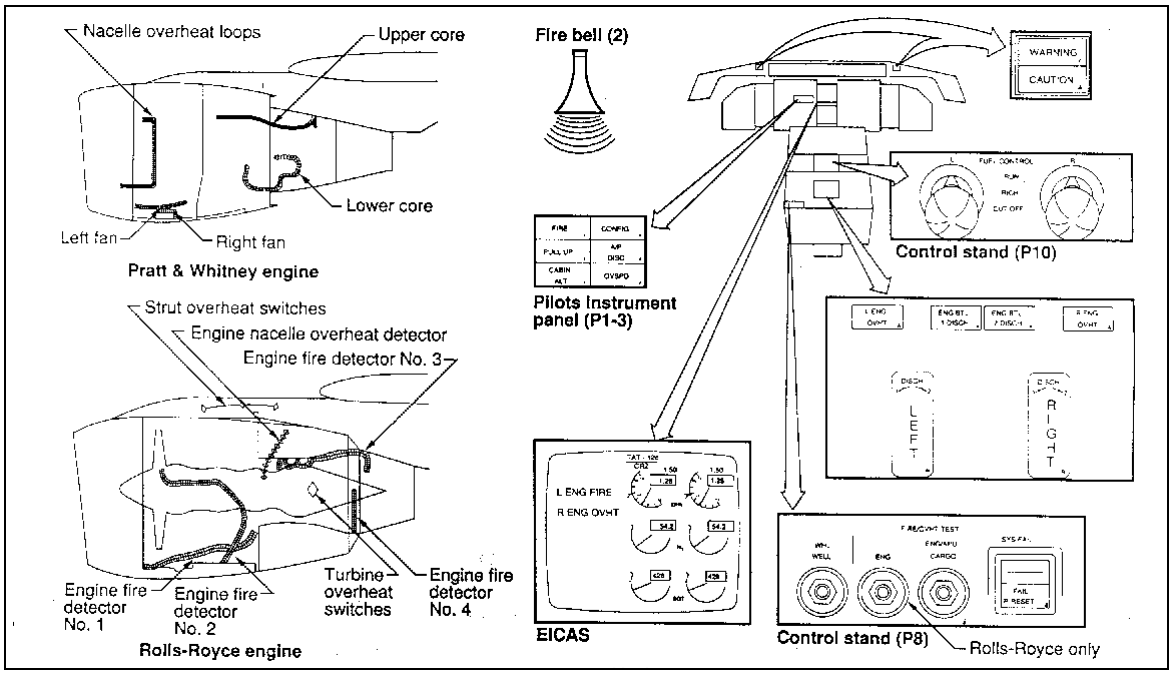

Figure 5.0-7. Engine Fire and Overheat Detection and Warning (1)

- **Engine fire and overheat detection is provided by two independent dual-loop detector systems on each engine. Several temperature limits are integrated into the system, depending on the sensor location on the engine.**

- **The logic that controls the system normally requires both loops to provide a warning signal before a fire or overheat alarm is triggered. A single-loop signal is indicated on the engine indication and crew alerting system (EICAS). The second loop signal, if initiated, causes fire or overheat alarm activation. A fire is indicated by a fire bell; illumination of the master warning lights, fire discrete warning light, fire handle and fuel control switch lights; and a level A warning display on the EICAS.**

Figure 5.0-8. Engine Fire and Overheat Detection and Warning (2)

- **Pressing either master WARNING/CAUTION lightswitch or pulling the fire switch silences the fire bell and resets the master warning lights.**

- **An engine overheat is indicated by a caution aural tone and illumination of the master caution lights. The corresponding engine overheat light and a caution display on EICAS also illuminate.**

- **The complete engine fire and overheat detection system can be tested before and during flight by simulating fire and overheat conditions. Operation of the two switches on the FIRE/OVHT TEST module, located on the pilots control stand (P8), actuates a simulated fire and overheat condition. If the element loop and control unit are operating properly, the alarm devices will be energized.**

Figure 5.0-9. Engine Fire and Overheat Detection and Warning (3)

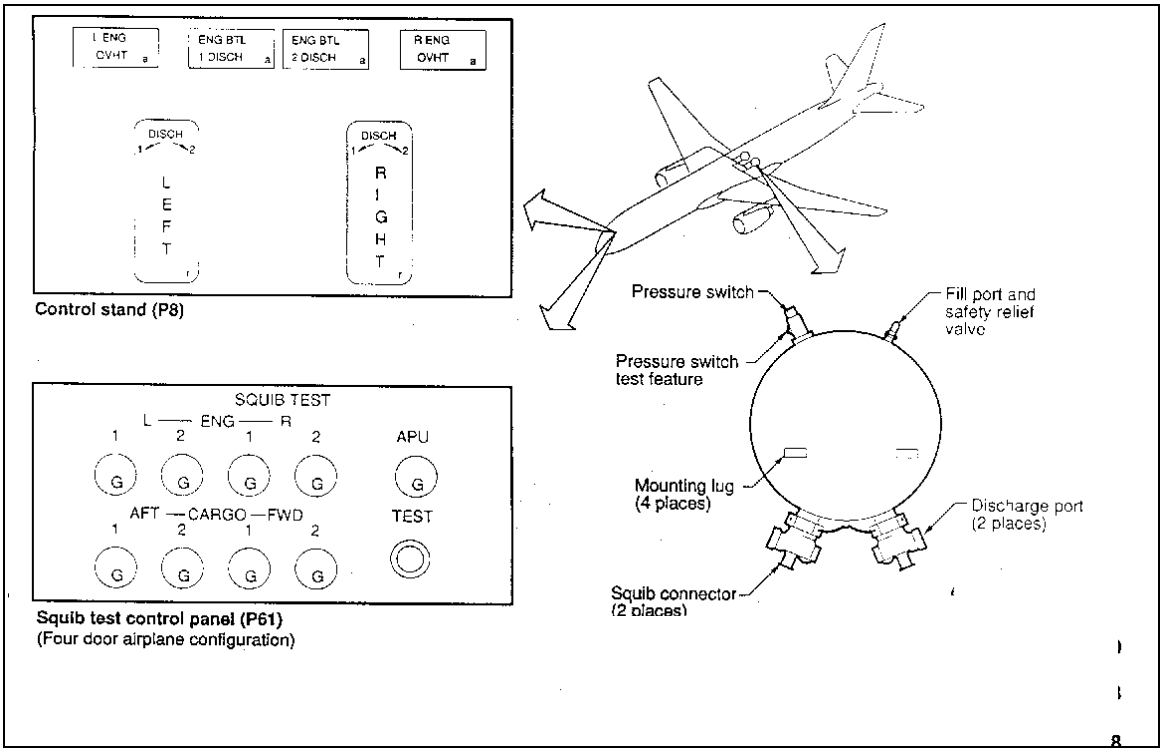

Figure 5.0-10. Engine Fire Extinguishing System (1)

- **The engine fire extinguisher discharge switches are incorporated in the fire switch handles on the control stand (P8). A two-step process arms and activates the extinguishing system.**

- **Pulling either fire switch handle does the following:**

  - **Closes the engine fuel supply valves.**
  - **Closes the engine bleed valve and isolation valve.**
  - **Trips the generator.**
  - **Closes the hydraulic supply valve.**
  - **Arms the extinguishing system.**
  - **Silences the bell and resets the master warning lights.**
  - **Closes the thrust reverser isolation valve.**
  - **Closes the APU bleed valve (from left fire switch handle only.)**

Figure 5.0-11. Engine Fire Extinguishing

- **Turning the fire switch handle clockwise or counterclockwise discharges one fire extinguisher bottle and, if turned the opposite direction, discharges the second bottle. The bottles are installed in the forward portion of the aft cargo compartment. The engine bottle discharge light on the pilots control stand illuminates when the pressure switch o the fire bottle indicates that the extinguishing agent has been discharged.**

- **The extinguisher bottle explosive squibs are tested using the test switch on the right side panel (P61). Illumination of the squib lights indicates operational squibs. The bottle pressure switch can be tested with a switch actuator on the bottle.**

Figure 5.0-12. Engine Fire Extinguisher

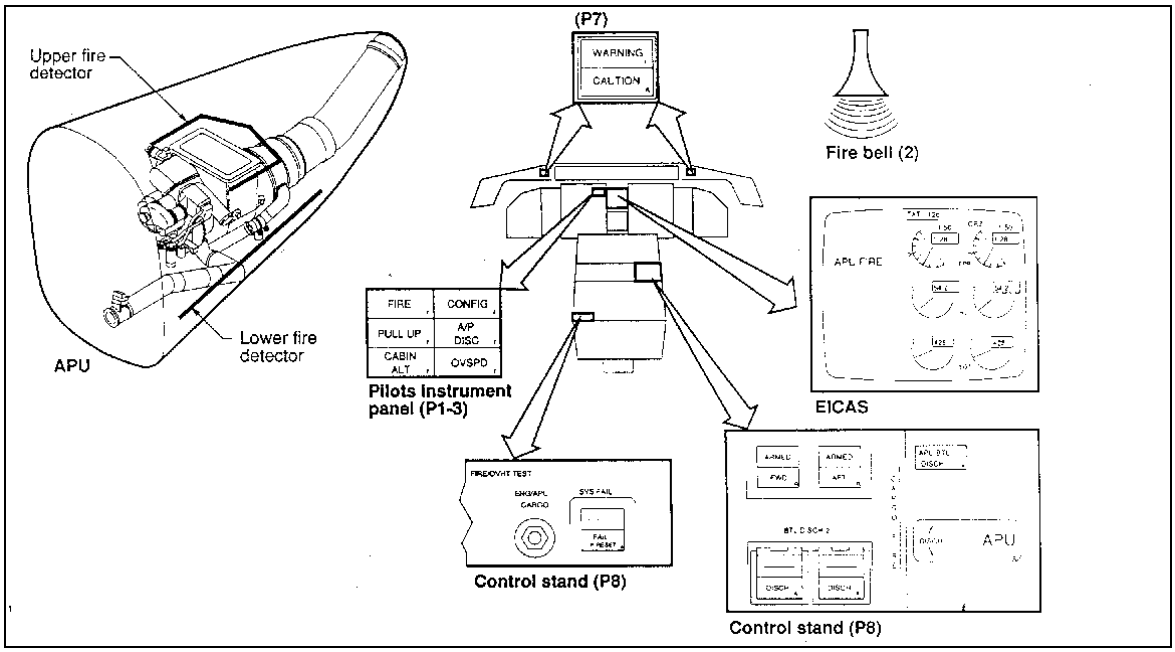

Figure 5.0-13. APU Fire Detection and Warning (1)

- **A dual-loop fire detection system, consisting of upper and lower detector elements mounted in the APU compartment, provides a fire warning through the central warning system. An APU fire warning signal initiates an APU auto shutdown.**
- **Fire detection and warning electronics cards process the detector signals that generate warnings.**
- **APU fire detection indication in the flight deck consists of a red annunciator light in the APU fire handle, master warning lights, bells, and EICAS display. A red APU fire light and a horn are also externally mounted in the APU remote control panel (P62) on the nose landing gear.**
- **The bell is turned off by pressing the master WARNING/CAUTION switch-lights or pulling the fire handle.**

Figure 5.0-14. APU Fire Detection and Warning (2)

- **The complete APU fire detection system can be tested before and during flight by simulating fire conditions. Operating the ENG/APU/CARGO switch on the FIRE/OVHT TEST module located on the control stand (P8) actuates a simulated fire condition. If the element loop or the control unit is inoperative, the EICAS system will indicate the faulty loop.**

Figure 5.0-15. APU Fire Detection and Warning (3)

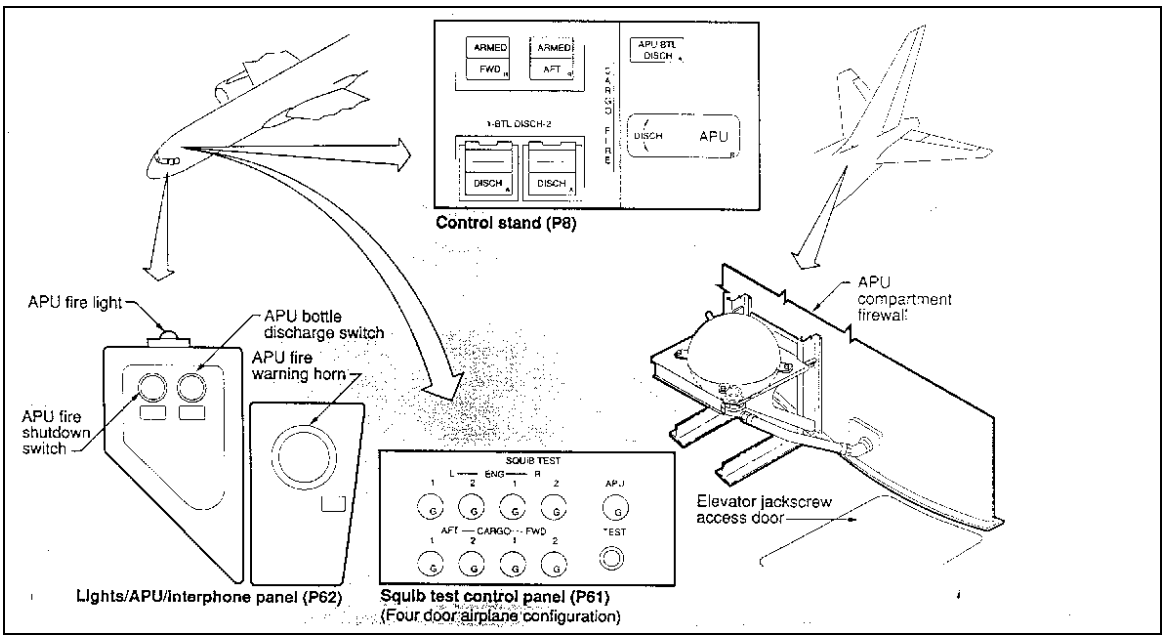

Figure 5.0-16. APU Fire Extinguishing (1)

- **The APU fire extinguishing system consists of a single fire bottle located forward of the firewall bulkhead. The controls for releasing the extinguishing agent are located on the control stand (P8) and the APU remote control panel (P62) on the nose landing gear.**

- **Actuating either the APU fire switch or external fire switch does the following:**

    - **Closes the APU fuel valve.**
    - **Closes the APU bleed valve.**
    - **Trips the APU generator.**
    - **Arms the extinguishing system.**
    - **Silences the bell and resets the master warning lights.**

Figure 5.0-17. APU Fire Extinguishing (2)

- **Turning the APU fire handle (P8) in either direction or pressing the APU fire extinguisher bottle discharge switch on the lights/APU/interphone panel (P62) discharges the fire extinguisher bottle into the APU compartment. Bottle discharge indication appears on the P8 panel.**

- **The extinguisher bottle squib is tested using the test switch on the right side panel (P61). Illumination of the squib light indicates a functioning squib.**

Figure 5.0-18. APU Fire Extinguishing (3)

- **The pneumatic duct leak detection system is divided into right and left zones and is designed to notify the crew of a duct leak. There is no extinguishing system.**

Figure 5.0-19. Wing Duct Leak Detection

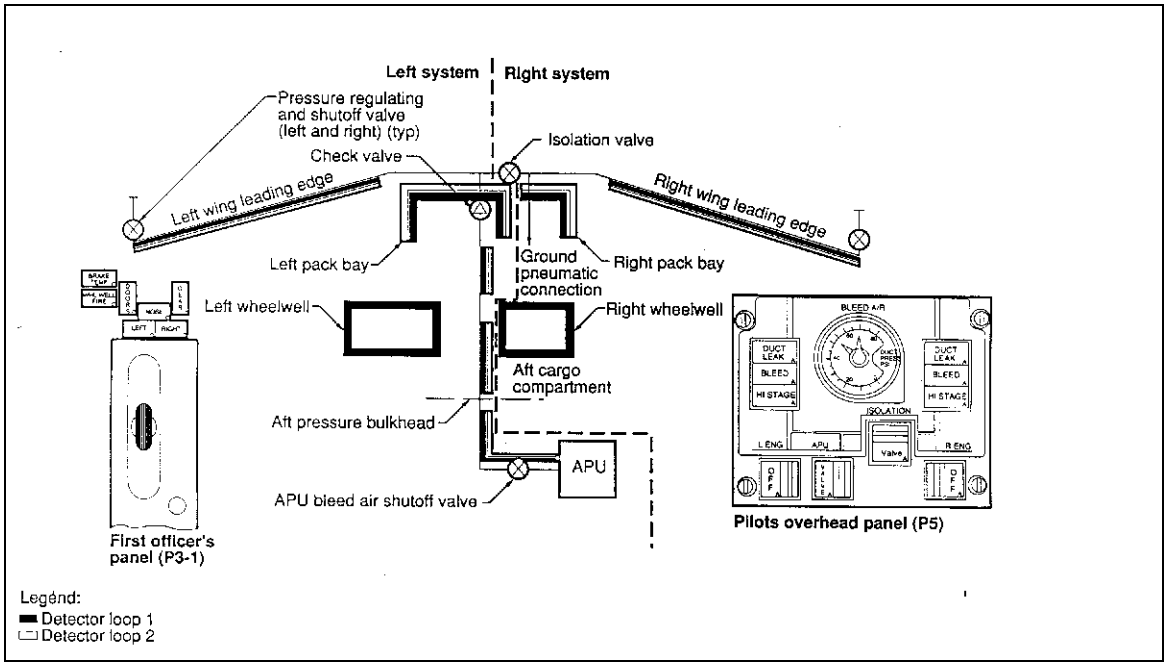

Figure 5.0-20. Wheel Well Fire and Duct Leak Detection (1)

- **The wheel well fire warning is initiated by a single sensor loop mounted on the ceiling of the main wheel wells.**
- **Duct leak warning is initiated by dual sensor loops mounted along the pneumatic ducts.**

- **The alarm indications are initiated when the wheel well or duct temperature sensor reaches a predetermined level. A wheel well fire activates the fire bell, the master warning lights, the discrete fire light, and the discrete wheel well fire light. A duct leak turns on the master caution lights and the discrete duct leak lights on the P5 pneumatic control panel and sounds the caution aural tone. The EICAS provides caution and warning messages on overheat and fire conditions. Because there is no fire extinguishing bottle for the wheel well, the landing gear is lowered to put out a fire and cool parts such as brakes.**

Figure 5.0-21. Wheel Well Fire and Duct Leak Detection (2)

The engine nacelle and APU bay fire protection systems consist of spherical, pressurized, squib-activated Halon storage bottles, with distribution tubing to each of the engine nacelles and a separate system for the APU bay. For typical Boeing 7X7 twin-engine model aircraft, the two bottles are mounted in the forward cargo compartment outside the cargo compartment liner on the right side of the fuselage lower lobe. An exception to this installation is that on all 737 models the bottles are mounted on the aft bulkhead in the left wheel well.

Distribution tubing for the engine nacelles is routed from the aft bulkhead and out to both wings, (either in the wing leading or trailing edge) to the engine struts. From there the distribution tubes are routed through the struts to various locations in the engine nacelles. The distribution system is designed to provide two shots (applications) of Halon to either engine or a single shot to each engine.

On the 747 aircraft the Halon bottles are mounted in each wing leading edge, inboard of the inboard engines. The distribution tubes are routed to each engine on that wing. Each 747 system has two bottles capable of providing a single discharge for each engine or two extinguishant discharges to one engine on each wing. There is no inter-connection of the distribution tubing or Halon storage bottles between the wings.

The engine nacelle fire protection system weight of the fire bottles, tubing, and mounting hardware is shown in table 5.0-2. The weight is determined by where the bottles are mounted, the size of the nacelle and the distribution system, and the amount of agent required to meet the certification requirements. The 747 system is considerably heavier because it requires four bottles (instead of two for the twin engine airplanes). The mounting hardware in the wing leading edge installations is heavier than the cargo bay installations. The 747 also requires larger diameter distribution tubing for all four engines.

Table 5.0-2. Weights for Engine Nacelle Fire Extinguishing Systems

	Weight, lb					
Airplane Model	737-NG	757-200	767-300	777-200	777-300	747-400
Bottle installation and agent	25.7	45.0	40.6	81.6	83.9	222.9
Plumbing and Mounting Brackets	15.2	27.5	37.6	41.8	38.1	68.2
Total	40.9	72.5	78.2	123.4	122.0	291.1

5.3.2 APU Bay Description

The fire extinguishing system for the APU is similar to the extinguishing system in the engine nacelles. One fire bottle is mounted just forward of the APU bulkhead with a short distribution line that brings Halon 1301 into the APU bay. There is little airflow through the APU bay, so the fire extinguishing system is capable of flooding the bay with Halon from a single nozzle. Because of the small volume the APU bay, the fire bottle can be much smaller than the engine fire bottles. The short length of distribution tubing in the system weighs much less than the engine nacelle systems, as shown in table 5.0-3.

Table 5.0-3. Weights for APU Bay Fire Extinguishing Systems

	Weight, lb					
Airplane model	737-NG	757-200	767-300	777-200	777-300	747-400
Bottle installation and agent	4.9		23.8	24.3	24.3	46.0
Plumbing and mounting brackets	2.1		2.3	2.2	2.2	4.0
Total	7.0	30.7	26.1	26.5	26.5	50.0

An attempt has been made in this report to estimate what the requirements would be if a decision were made to replace the Halon extinguishant with an equivalent level of protection using nitrogen. There is not a one-for-one replacement between Halon and nitrogen.

5.4. Fuel Systems Description

Figures 5.0-22 through 5.0-35 are schematics of a 747 type of fuel system including:

1. Tank capacities.
2. Tank arrangement.
3. Vent system.
4. Fuel quantity measurement system.
5. Fueling system.
6. Fuel feed pumps.

A fuel tank inerting system would interface with all of these fuel subsystems. There must be no adverse impact on fuel subsystem performance or reliability.

Altitude:	**Sea Level to 45,000 ft.**
Fuel Type:	**Jet A and Jet A-1** **Freeze Point +5°F Minimum to 130°F**
Fuel Tank Capacity:	**57,000 Gallons (383,000 lb.) (approx)**
Refueling Rate:	**4 nozzles @ 30 PSIG > 1,400 GPM**
Engine Fuel Flow:	**Take off = 26,800 pph (approx)** **Cruise = 5,000 to 6,000 pph (approx)**

Figure 5.0-22. 747-400 Fuel System Performance

- Fuel storage tanks are used to store all fuel in vented areas of wing, wing center section, and horizontal stabilizer
- Fuel storage is divided into 8 separate tanks

* The capacities listed are the total capacities of the 2 tanks

Tank description	Capacity (gallons)	Capacity (pounds)
Center wing	17,164	114,999
No. 2 and 3 Main*	25,092	168,116
No. 1 and 4 Main*	8,744	58,584
No. 2 and 3 Reserve*	2,644	17,714
HST (optional)	3,300	22,109
Total	56,944	381,522

Figure 5.0-23. 747-400F Fuel Systems

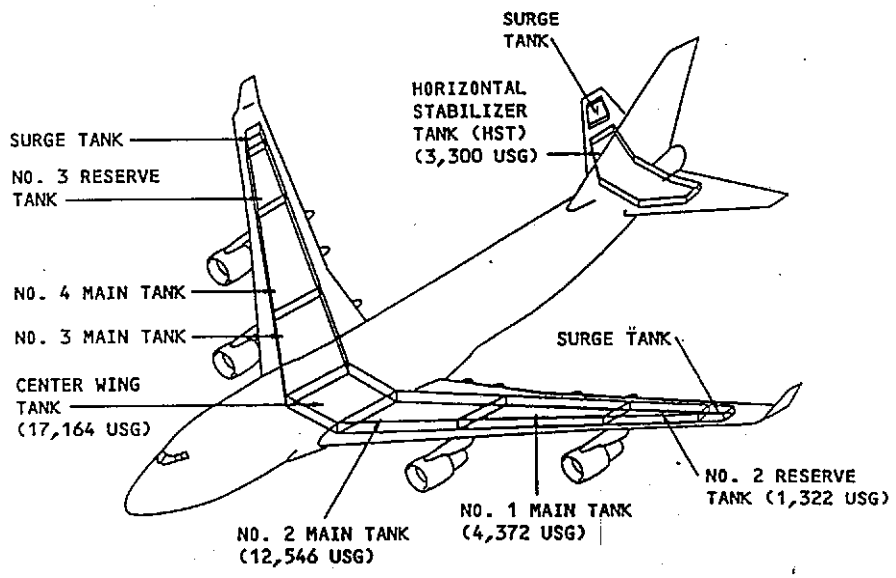

Figure 5.0-24. 747-400 Fuel Tank Arrangement (1)

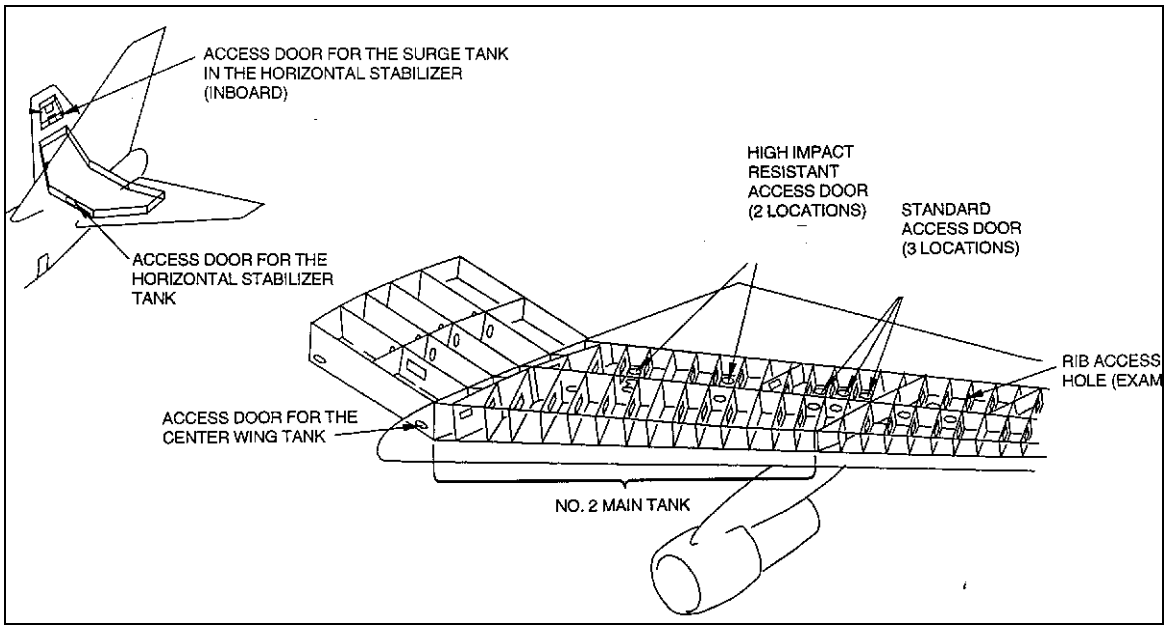

Figure 5.0-25. 747-400 Fuel Tank Arrangement (2)

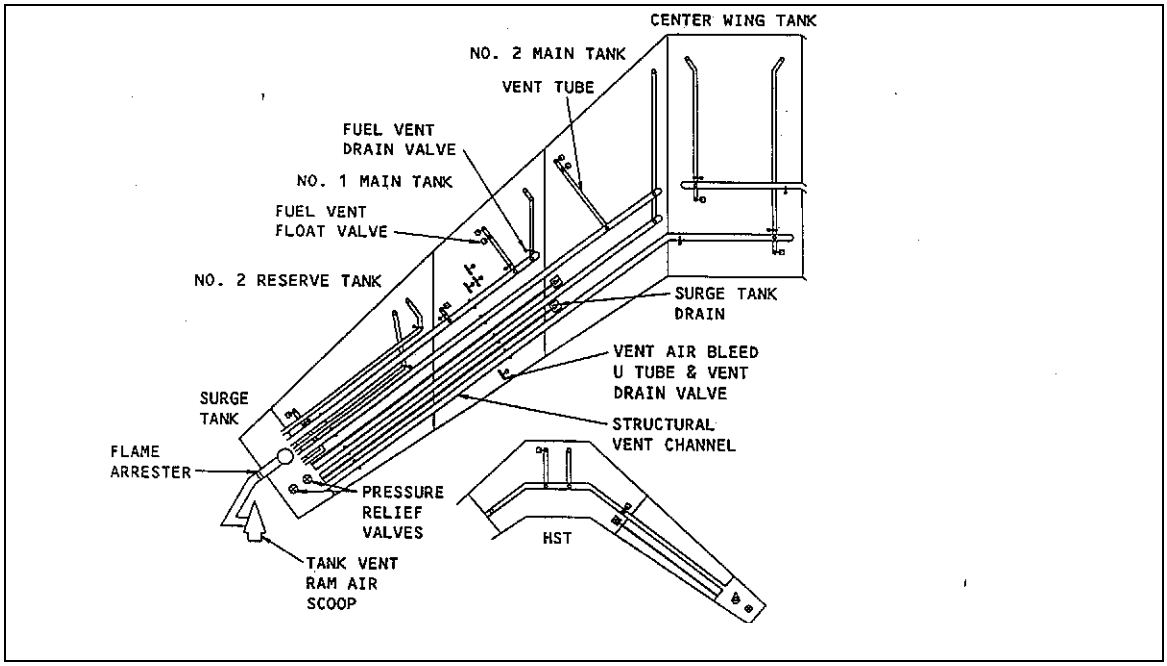

Figure 5.0-26. 747-400 Fuel Tank Venting

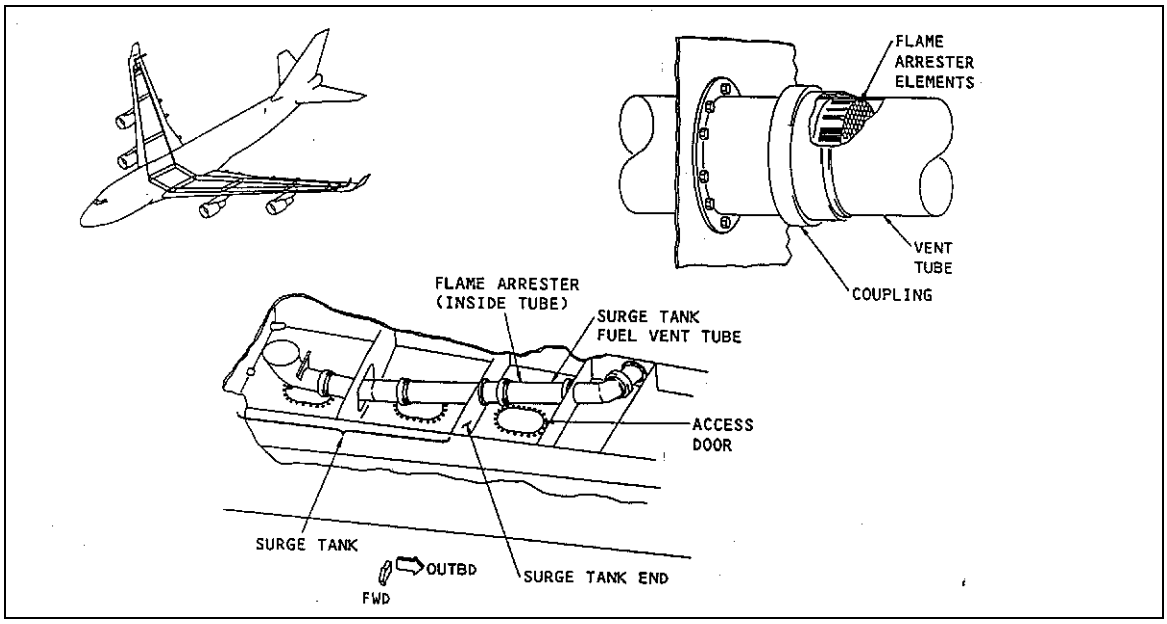

Figure 5.0-27. Wing Surge Tank Flame Arrester

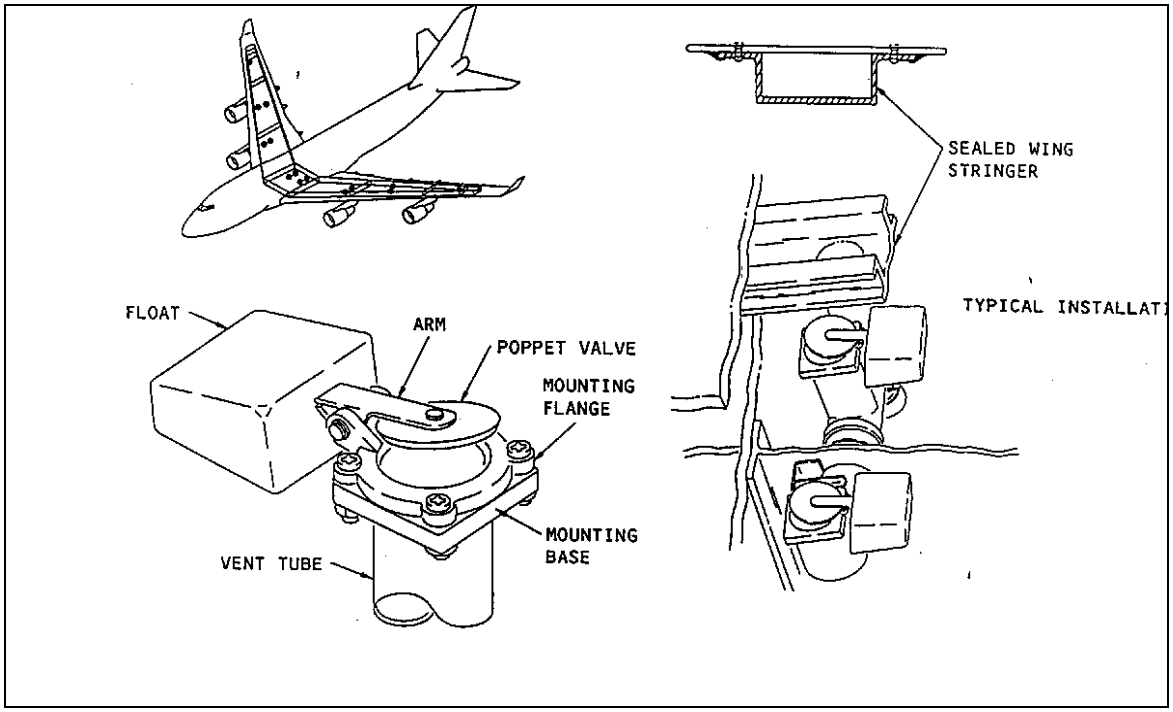

Figure 5.0-28. 747-400 Fuel Vent Float Valves

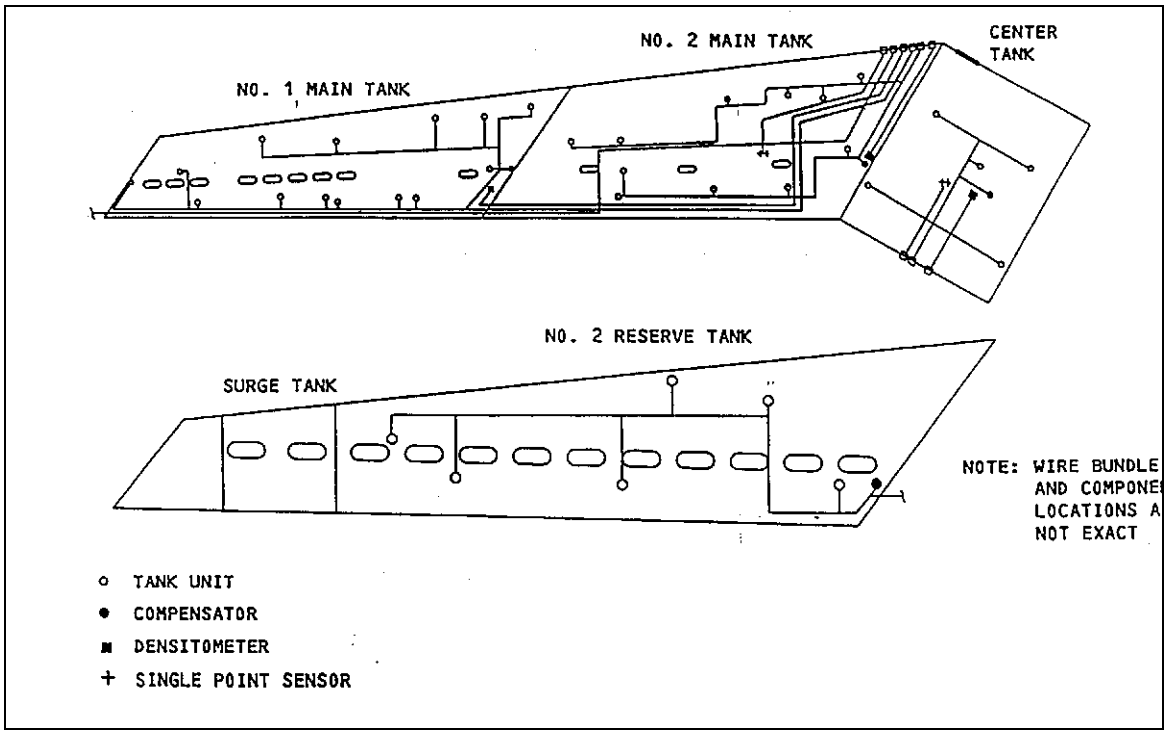

Figure 5.0-29. Center and Wing Tank FQIS Components

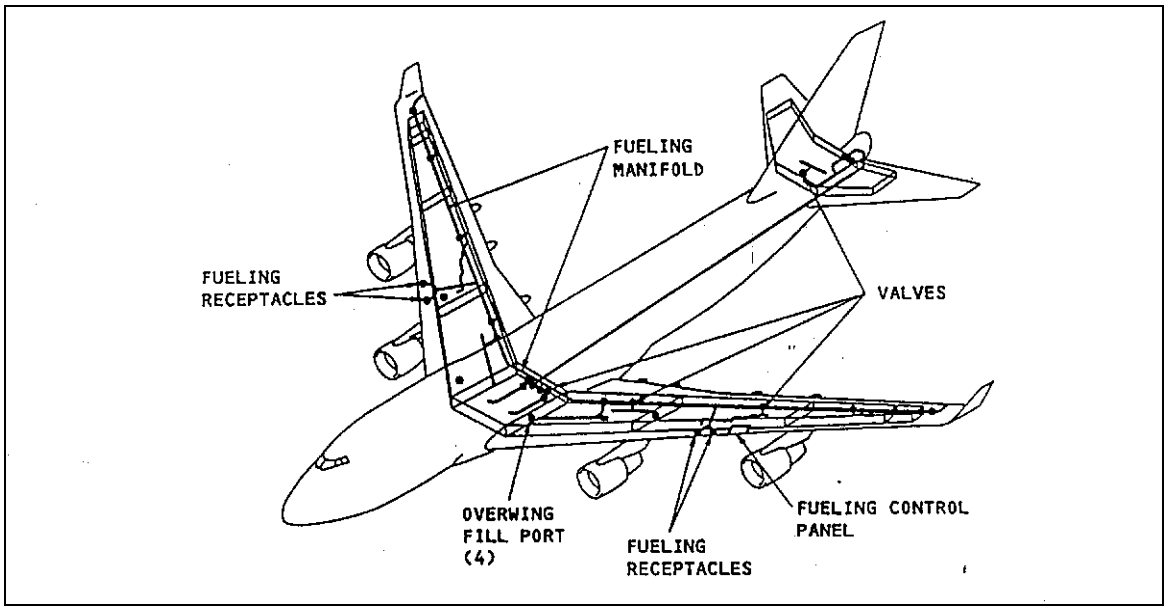

Figure 5.0-30. 747-400 Fueling System - General

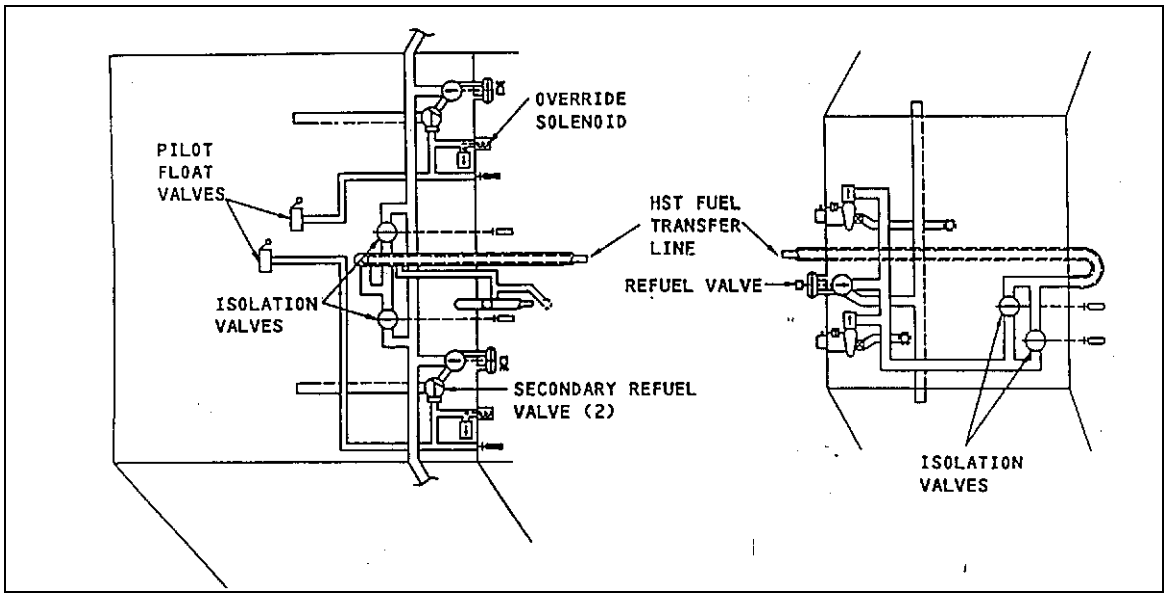

Figure 5.0-31. 747-400 Fueling System – CWT and HST (1)

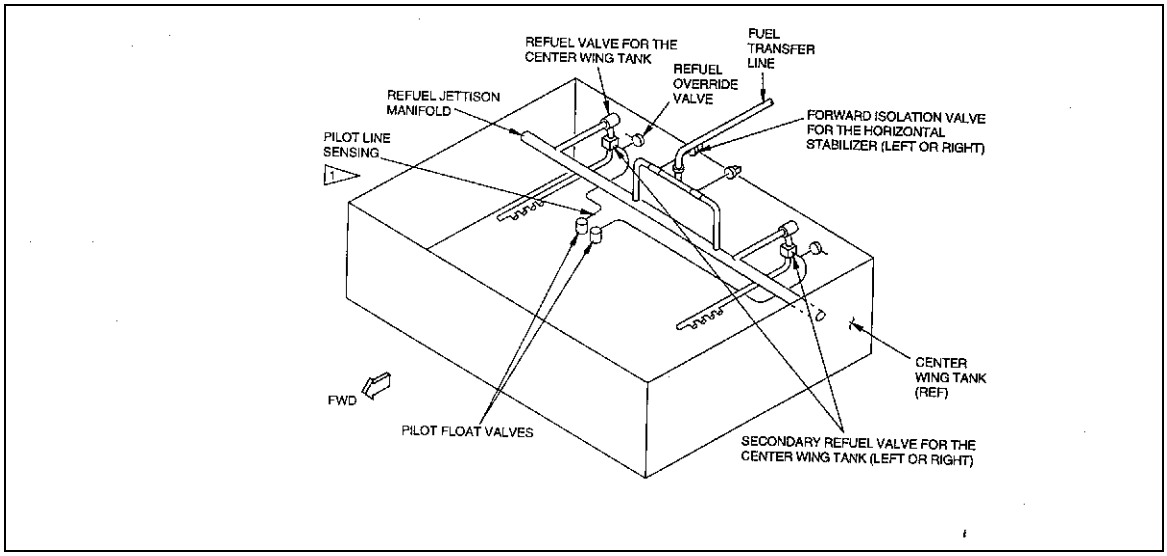

Figure 5.0-32. 747-400 Fueling System – CWT and HST (2)

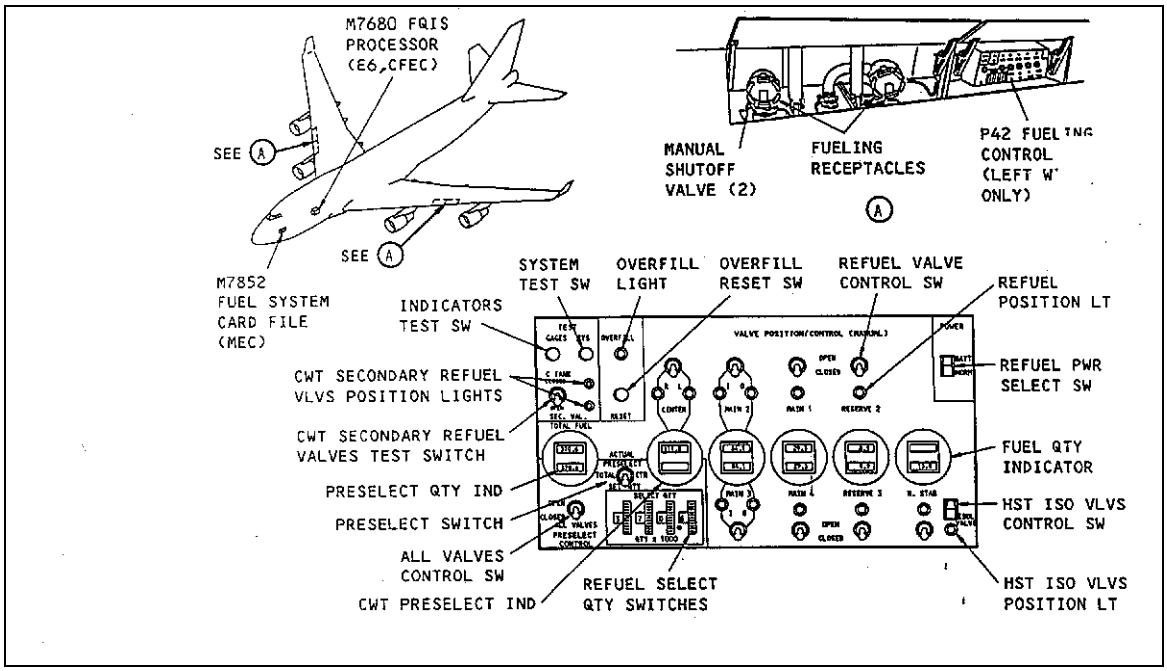

Figure 5.0-33. 747-400 Fueling System – CWT and HST (3)

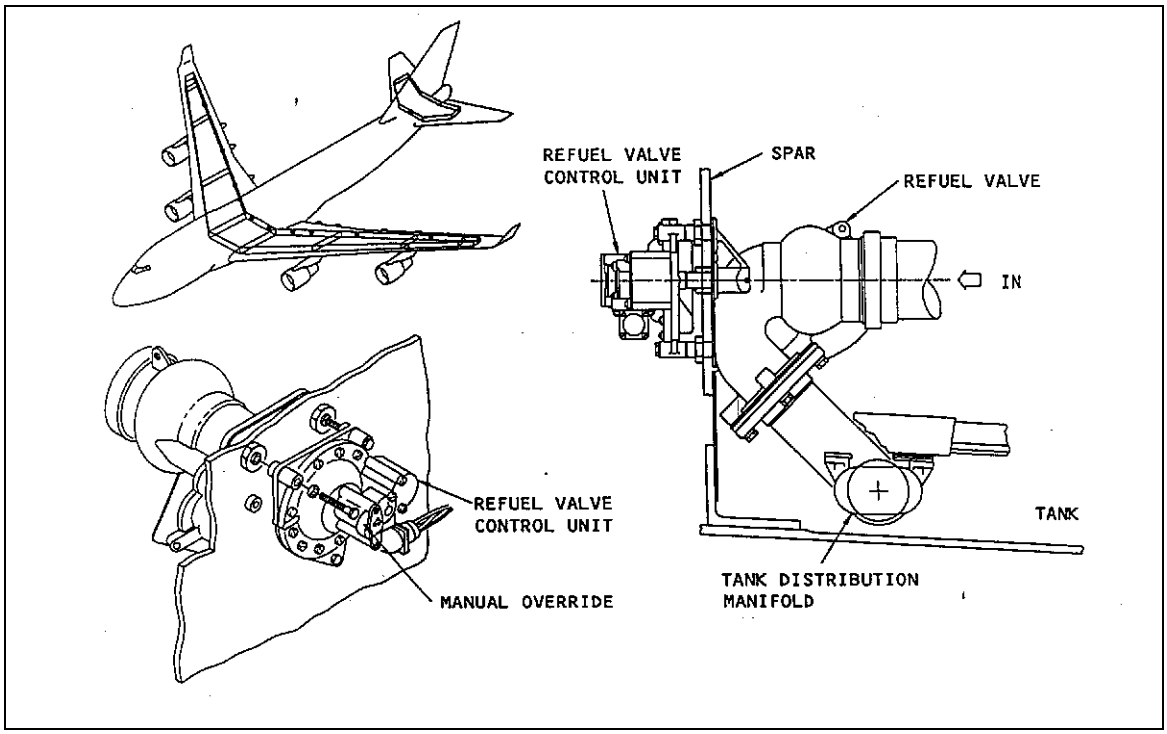

Figure 5.0-34. 747-400 Refueling Valves

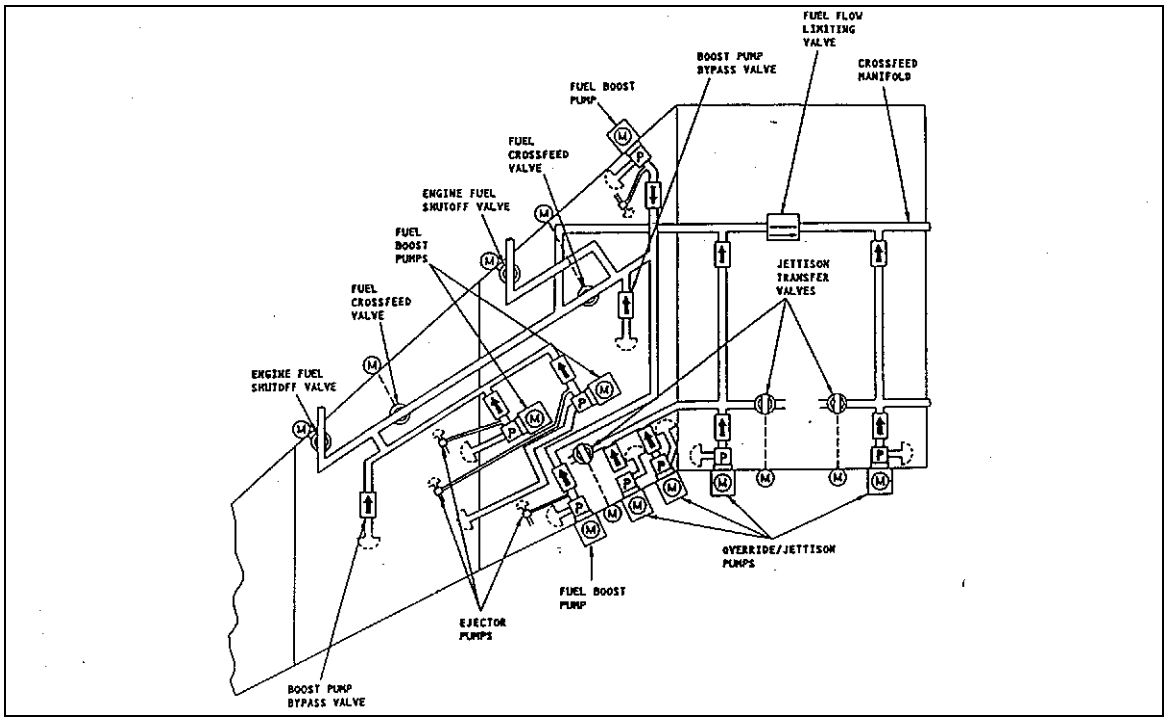

Figure 5.0-35. 747-400 Engine Fuel Feed System

5.5. Analysis

Figure 5.0-36 shows tank ullage oxygen content versus OBIGGS flow to a tank.

An open or vented tank, with 100% mixing would require approximately 1.5 volumes of inert OBIGGS volume flow to provide 9.0% oxygen content as noted on figure 5-36.

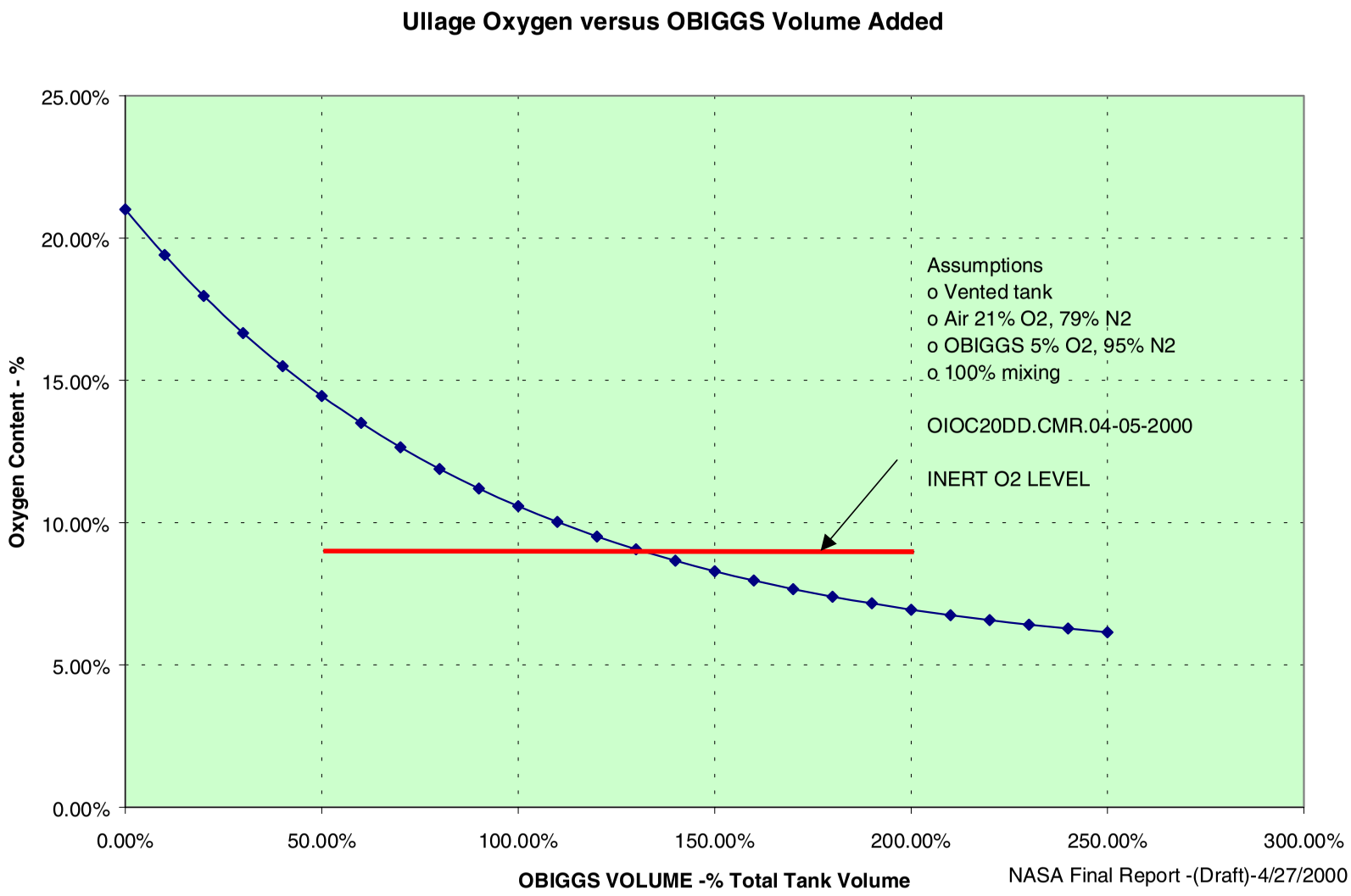

Figure 5.0-36. Ullage Oxygen Versus OBIGGS Volume Added

Fuel tank venting, fuel tank cross venting, air evolution from the fuel, and aircraft climb and descent conditions may increase the oxygen content in the ullage space.

Analysis for following study phases may include the following:

a. Analysis would consider near empty tanks, partially full, and full fuel tanks.

b. Future analysis may include limited inerting of center tank.

c. Analysis would consider FAA and NASA data collected on jet fuel flammability.

d. Analysis would consider supplemental inerting during fueling. Supplemental inerting would be provided from a ground source.

APPENDIX A: APPLICABLE FEDERAL AVIATION REGULATIONS AND ADVISORY CIRCULARS

Federal Aviation Regulations (FAR), Part 25, Airworthiness Standards: Transport Category Airplanes. Applicable General System Requirements.

FAR Section	Requirement	Comments
Sec. 25.581 Lightning protection. [Amdt. 25-23, 35 FR 5674, Apr. 8, 1970]	(a) The airplane must be protected against catastrophic effects from lightning. (b) For metallic components, compliance with paragraph (a) of this section may be shown by-- (1) Bonding the components properly to the airframe; or (2) Designing the components so that a strike will not endanger the airplane. (c) For nonmetallic components, compliance with paragraph (a) of this section may be shown by-- (1) Designing the components to minimize the effect of a strike; or (2) Incorporating acceptable means of diverting the resulting electrical current so as not to endanger the airplane.	
Sec. 25.729 Retracting mechanism. [Doc. No. 5066, 29 FR 18291, Dec. 24, 1964, as amended by Amdt. 25-23, 35 FR 5676, Apr. 8, 1970; Amdt. 25-42, 43 FR 2323, Jan. 16, 1978; Amdt. 25-72, 55 FR 29777, July 20, 1990; Amdt. 25-75, 56 FR 63762, Dec. 5, 1991]	(f) Protection of equipment in wheel wells. Equipment that is essential to safe operation of the airplane and that is located in wheel wells must be protected from the damaging effects of-- (1) A bursting tire, unless it is shown that a tire cannot burst from overheat; and (2) A loose tire tread, unless it is shown that a loose tire tread cannot cause damage.	

FAR Section	Requirement	Comments
Sec. 25.863 Flammable fluid fire protection. [Amdt. 25-23, 35 FR 5676, Apr. 8, 1970, as amended by Amdt. 25-46, 43 FR 50597, Oct. 30, 1978]	(a) In each area where flammable fluids or vapors might escape by leakage of a fluid system, there must be means to minimize the probability of ignition of the fluids and vapors, and the resultant hazards if ignition does occur. (b) Compliance with paragraph (a) of this section must be shown by analysis or tests, and the following factors must be considered: (1) Possible sources and paths of fluid leakage, and means of detecting leakage. (2) Flammability characteristics of fluids, including effects of any combustible or absorbing materials. (3) Possible ignition sources, including electrical faults, overheating of equipment, and malfunctioning of protective devices. (4) Means available for controlling or extinguishing a fire, such as stopping flow of fluids, shutting down equipment, fireproof containment, or use of extinguishing agents. (5) Ability of airplane components that are critical to safety of flight to withstand fire and heat. (c) If action by the flight crew is required to prevent or counteract a fluid fire (e.g., equipment shutdown or actuation of a fire extinguisher) quick acting means must be provided to alert the crew. (d) Each area where flammable fluids or vapors might escape by leakage of a fluid system must be identified and defined.	The cargo compartment is not a flammable fluid zone. Areas where the current Halon bottles and distribution system are generally not flammable fluid zones.
Sec. 25.869 Fire protection: systems. [Doc. No. 24344, Amdt. 25-72, 55 FR	(a) Electrical system components: (1) Components of the electrical system must meet the applicable fire and smoke protection requirements of Secs. 25.831(c) and 25.863. (2 Electrical cables, terminals, and equipment in designated fire zones, that are used during emergency procedures, must be at least fire resistant.	

FAR Section	Requirement	Comments
29784, July 20, 1990] Sec. 25.869 (Cont.)	(3) Main power cables (including generator cables) in the fuselage must be designed to allow a reasonable degree of deformation and stretching without failure and must be-- (i) Isolated from flammable fluid lines; or (ii) Shrouded by means of electrically insulated, flexible conduit, or equivalent, which is in addition to the normal cable insulation. (4) Insulation on electrical wire and electrical cable installed in any area of the fuselage must be self-extinguishing when tested in accordance with the applicable portions of part I, appendix F of this part. (b) Each vacuum air system line and fitting on the discharge side of the pump that might contain flammable vapors or fluids must meet the requirements of Sec. 25.1183 if the line or fitting is in a designated fire zone. Other vacuum air systems components in designated fire zones must be at least fire resistant. (c) Oxygen equipment and lines must-- (1) Not be located in any designated fire zone, (2) Be protected from heat that may be generated in, or escape from, any designated fire zone, and (3) Be installed so that escaping oxygen cannot cause ignition of grease, fluid, or vapor accumulations that are present in normal operation or as a result of failure or malfunction of any system.	
Sec. 25.903 Engines. [Doc. No. 5066, 29 FR 18291, Dec. 24, 1964, as amended by Amdt. 25-23, 35 FR 5676, Apr. 8, 1970; Amdt.	(d) Turbine engine installations. For turbine engine installations-- (1) Design precautions must be taken to minimize the hazards to the airplane in the event of an engine rotor failure or of a fire originating within the engine which burns through the engine case.	

FAR Section	Requirement	Comments
25-40, 42 FR 15042, Sec. 25.903 (Cont.) Mar. 17, 1977; Amdt. 25-57, 49 FR 6848, Feb. 23, 1984; Amdt. 25-72, 55 FR 29784, July 20, 1990; Amdt. 25-73, 55 FR 32861, Aug. 10, 1990; 55 FR 35139, Aug. 28, 1990; Amdt. 25-94, 63 FR 8848, Feb. 23, 1998; Amdt. 25-95, 63 FR 14798, March 26, 1998]		
Sec. 25.1301 Function and installation.	Each item of installed equipment must-- (a) Be of a kind and design appropriate to its intended function; (b) Be labeled as to its identification, function, or operating limitations, or any applicable combination of these factors; (c) Be installed according to limitations specified for that equipment; and (d) Function properly when installed.	
Sec. 25.1309 Equipment, systems, and installations. [Amdt. 25-23, 35 FR 5679, Apr. 8, 1970, as amended by Amdt. 25-38, 41 FR 55467, Dec.	(a) The equipment, systems, and installations whose functioning is required by this subchapter, must be designed to ensure that they perform their intended functions under any foreseeable operating condition. (b) The airplane systems and associated components, considered separately and in relation to other systems, must be designed so that-- (1) The occurrence of any failure condition which would prevent the continued safe flight and landing of the airplane is extremely improbable, and	Requires qualification test to demonstrate operational characteristics when exposed to various environmental inputs.

FAR Section	Requirement	Comments
20, 1976; Amdt. 25- Sec. 25.1309 (Cont.) 41, 42 FR 36970, July 18, 1977]	(2) The occurrence of any other failure conditions which would reduce the capability of the airplane or the ability of the crew to cope with adverse operating conditions is improbable. (c) Warning information must be provided to alert the crew to unsafe system operating conditions, and to enable them to take appropriate corrective action. Systems, controls, and associated monitoring and warning means must be designed to minimize crew errors which could create additional hazards. (d) Compliance with the requirements of paragraph (b) of this section must be shown by analysis, and where necessary, by appropriate ground, flight, or simulator tests. The analysis must consider-- (1) Possible modes of failure, including malfunctions and damage from external sources. (2) The probability of multiple failures and undetected failures. (3) The resulting effects on the airplane and occupants, considering the stage of flight and operating conditions, and (4) The crew warning cues, corrective action required, and the capability of detecting faults. (e) Each installation whose functioning is required by this subchapter, and that requires a power supply, is an "essential load" on the power supply. The power sources and the system must be able to supply the following power loads in probable operating combinations and for probable durations: (1) Loads connected to the system with the system functioning normally. (2) Essential loads, after failure of any one prime mover, power converter, or energy storage device. (3) Essential loads after failure of-- (i) Any one engine on two-engine airplanes; and	Requires numerical analysis to demonstrate the probability of an uncontrolled cargo fire is less than 10^{-9} per flight hour. Requires a detailed FMEA (Failure Mode and Effects Analysis) to show the predicted failure of the cargo fire suppression system (such as OBIGGS) integrated into airplane systems is less than 10^{-4} occurrences per flight hour to support top level uncontrolled fire. Requires appropriate indication of the operational condition of the affected systems/components.

FAR Section	Requirement	Comments
	(ii) Any two engines on three-or-more-engine airplanes.	
Sec. 25.1309 (Cont.)	(4) Essential loads for which an alternate source of power is required by this chapter, after any failure or malfunction in any one power supply system, distribution system, or other utilization system. (g) In showing compliance with paragraphs (a) and (b) of this section with regard to the electrical system and equipment design and installation, critical environmental conditions must be considered. For electrical generation, distribution, and utilization equipment required by or used in complying with this chapter, except equipment covered by Technical Standard Orders containing environmental test procedures, the ability to provide continuous, safe service under foreseeable environmental conditions may be shown by environmental tests, design analysis, or reference to previous comparable service experience on other aircraft.	
Sec. 25.1322 Warning, caution, and advisory lights. [Amdt. 25-38, 41 FR 55467, Dec. 20, 1976]	If warning, caution or advisory lights are installed in the cockpit, they must, unless otherwise approved by the Administrator, be-- (a) Red, for warning lights (lights indicating a hazard which may require immediate corrective action); (b) Amber, for caution lights (lights indicating the possible need for future corrective action); (c) Green, for safe operation lights; and (d) Any other color, including white, for lights not described in paragraphs (a) through (c) of this section, provided the color differs sufficiently from the colors prescribed in paragraphs (a) through (c) of this section to avoid possible confusion.	
Sec. 25.1353 Electrical equipment and installations.	(a) Electrical equipment, controls, and wiring must be installed so that operation of any one unit or system of units will not adversely affect the simultaneous operation of any other electrical unit or system essential to the safe operation.	

FAR Section	Requirement	Comments
and installations. [Doc. No. 5066, 29 FR 18291, Dec. 24, 1964, Sec. 25.1353 (Cont.) as amended by Amdt. 25-41, 42 FR 36970, July 18, 1977; Amdt. Sec. 25.1322 (Cont.) 25-42, 43 FR 2323, Jan. 16, 1978]	(b) Cables must be grouped, routed, and spaced so that damage to essential circuits will be minimized if there are faults in heavy current-carrying cables. (c) Storage batteries must be designed and installed as follows: (1) Safe cell temperatures and pressures must be maintained during any probable charging or discharging condition. No uncontrolled increase in cell temperature may result when the battery is recharged (after previous complete discharge)-- (i) At maximum regulated voltage or power; (ii) During a flight of maximum duration; and (iii) Under the most adverse cooling condition likely to occur in service. (2) Compliance with paragraph (c)(1) of this section must be shown by test unless experience with similar batteries and installations has shown that maintaining safe cell temperatures and pressures presents no problem. (3) No explosive or toxic gases emitted by any battery in normal operation, or as the result of any probable malfunction in the charging system or battery installation, may accumulate in hazardous quantities within the airplane. (4) No corrosive fluids or gases that may escape from the battery may damage surrounding airplane structures or adjacent essential equipment. (5) Each nickel cadmium battery installation capable of being used to start an engine or auxiliary power unit must have provisions to prevent any hazardous effect on structure or essential systems that may be caused by the maximum amount of heat the battery can generate during a short circuit of the battery or of its individual cells. (6) Nickel cadmium battery installations capable of being used to start an engine or auxiliary power unit must have-- (i) A system to control the charging rate of the battery automatically so as to prevent battery overheating; (ii) A battery temperature sensing and over-temperature warning system	

FAR Section	Requirement	Comments
Sec. 25.1353 (Cont.)	with a means for disconnecting the battery from its charging source in the event of an over-temperature condition; or (iii) A battery failure sensing and warning system with a means for disconnecting the battery from its charging source in the event of battery failure.	
Sec. 25.1357 Circuit protective devices.	(a) Automatic protective devices must be used to minimize distress to the electrical system and hazard to the airplane in the event of wiring faults or serious malfunction of the system or connected equipment. (b) The protective and control devices in the generating system must be designed to de-energize and disconnect faulty power sources and power transmission equipment from their associated busses with sufficient rapidity to provide protection from hazardous over-voltage and other malfunctioning. (c) Each resettable circuit protective device must be designed so that, when an overload or circuit fault exists, it will open the circuit irrespective of the position of the operating control. (d) If the ability to reset a circuit breaker or replace a fuse is essential to safety in flight, that circuit breaker or fuse must be located and identified so that it can be readily reset or replaced in flight. (e) Each circuit for essential loads must have individual circuit protection. However, individual protection for each circuit in an essential load system (such as each position light circuit in a system) is not required. (f) If fuses are used, there must be spare fuses for use in flight equal to at least 50 percent of the number of fuses of each rating required for complete circuit protection. (g) Automatic reset circuit breakers may be used as integral protectors for electrical equipment (such as thermal cut-outs) if there is circuit protection to protect the cable to the equipment.	

FAR Section	Requirement	Comments
Sec. 25.1431 Electronic Equipment	(a) In showing compliance with Sec. 25.1309 (a) and (b) with respect to radio and electronic equipment and their installations, critical environmental conditions must be considered. (c) Radio and electronic equipment, controls, and wiring must be installed so that operation of any one unit or system of units will not adversely affect the simultaneous operation of any other radio or electronic unit, or system of units, required by this chapter.	
Sec. 25.1555 Control markings.	(a) Each cockpit control, other than primary flight controls and controls whose function is obvious, must be plainly marked as to its function and method of operation. (d) For accessory, auxiliary, and emergency controls-- (1) Each emergency control (including each fuel jettisoning and fluid shutoff must be colored red; and. . .	

Federal Aviation Regulations (FAR), Part 25, Airworthiness Standards: Transport Category Airplanes. Requirements Specific to Cargo and Lavatory Fire Suppression.

FAR Section	Requirement	Comments
Sec. 25.851 Fire extinguishers. [56 FR 15456, April 16, 1991]	(a) Hand fire extinguishers. (1) The following minimum number of hand fire extinguishers must be conveniently located and evenly distributed in passenger compartments: Passenger capacity — No. of extinguishers 7 through 30 — 1 31 through 60 — 2 61 through 200 — 3 201 through 300 — 4 301 through 400 — 5 401 through 500 — 6 501 through 600 — 7 601 through 700 — 8 (2) At least one hand fire extinguisher must be conveniently located in the pilot compartment. (3) At least one readily accessible hand fire extinguisher must be available for use in each Class A or Class B cargo or baggage compartment and in each Class E cargo or baggage compartment that is accessible to crewmembers in flight. (4) At least one hand fire extinguisher must be located in, or readily accessible for use in, each galley located above or below the passenger compartment. (5) Each hand fire extinguisher must be approved. (6) At least one of the required fire extinguishers located in the passenger compartment of an airplane with a passenger capacity of at least 31 and not more than 60, and at least two of the fire extinguishers located in the passenger compartment of an airplane with a passenger capacity of 61 or	Capacity of a Halon 1301 cargo fire suppression system has been accepted as 5% knockdown and 3% sustained average minimum Halon requirements. Recent airplane certifications for the JAA have required each sampling point meet minimum Halon requirements.

FAR Section	Requirement	Comments
Sec. 25.851 (Cont.)	more must contain Halon 1211 (bromochlorodifluoromethane CBrC1F2), or equivalent, as the extinguishing agent. The type of extinguishing agent used in any other extinguisher required by this section must be appropriate for the kinds of fires likely to occur where used. (7) The quantity of extinguishing agent used in each extinguisher required by this section must be appropriate for the kinds of fires likely to occur where used. (8) Each extinguisher intended for use in a personnel compartment must be designed to minimize the hazard of toxic gas concentration. (b) Built-in fire extinguishers. If a built-in fire extinguisher is provided-- (1) Each built-in fire extinguishing system must be installed so that-- (i) No extinguishing agent likely to enter personnel compartments will be hazardous to the occupants; and (ii) No discharge of the extinguisher can cause structural damage. (2) The capacity of each required built-in fire extinguishing system must be adequate for any fire likely to occur in the compartment where used, considering the volume of the compartment and the ventilation rate.	
Sec. 25.854 Lavatory fire protection. [56 FR 15456, April 16, 1991]	For airplanes with a passenger capacity of 20 or more: (b) Each lavatory must be equipped with a built-in fire extinguisher for each disposal receptacle for towels, paper, or waste, located within the lavatory. The extinguisher must be designed to discharge automatically into each disposal receptacle upon occurrence of a fire in that receptacle.	Potty bottles.

FAR Section	Requirement	Comments
Sec. 25.855 Cargo or baggage compartments. [Doc. No. 24344, Amdt. 25-72, 55 FR 29784, July 20, 1990, as amended by Amdt. 25-93, 63 FR 8048, Feb. 17, 1998]	For each cargo and baggage compartment not occupied by crew or passengers, the following apply: (a) The compartment must meet one of the class requirements of Sec. 25.857. (b) Class B through Class E cargo or baggage compartments, as defined in Sec. 25.857, must have a liner, and the liner must be separate from (but may be attached to) the airplane structure. (c) Ceiling and sidewall liner panels of Class C compartments must meet the test requirements of part III of appendix F of this part or other approved equivalent methods. (d) All other materials used in the construction of the cargo or baggage compartment must meet the applicable test criteria prescribed in part I of appendix F of this part or other approved equivalent methods. (e) No compartment may contain any controls, wiring, lines, equipment, or accessories whose damage or failure would affect safe operation, unless those items are protected so that-- (1) They cannot be damaged by the movement of cargo in the compartment, and (2) Their breakage or failure will not create a fire hazard. (f) There must be means to prevent cargo or baggage from interfering with the functioning of the fire protective features of the compartment. (g) Sources of heat within the compartment must be shielded and insulated to prevent igniting the cargo or baggage. (h) Flight tests must be conducted to show compliance with the provisions of Sec. 25.857 concerning— (1) Compartment accessibility, (2) The entries of hazardous quantities of smoke or extinguishing agent into compartments occupied by the crew or passengers, and	

FAR Section	Requirement	Comments
Sec. 25.855 (Cont.)	(3) The dissipation of the extinguishing agent in Class C compartments. (i) During the above tests, it must be shown that no inadvertent operation of smoke or fire detectors in any compartment would occur as a result of fire contained in any other compartment, either during or after extinguishment, unless the extinguishing system floods each such compartment simultaneously.	
Sec. 25.857 Cargo compartment classification [Doc. No. 5066, 29 FR 18291, Dec. 24, 1964, as amended by Amdt. 25-32, 37 FR 3972, Feb. 24, 1972; Amdt. 25-60, 51 FR 18243, May 16, 1986; Amdt. 25-93, 63 FR 8048, Feb. 17, 1998]	(c) Class C. A Class C cargo or baggage compartment is one not meeting the requirements for either a Class A or B compartment but in which-- (1) There is a separate approved smoke detector or fire detector system to give warning at the pilot or flight engineer station; (2) There is an approved built-in fire extinguishing or suppression system controllable from the cockpit; (3) There are means to exclude hazardous quantities of smoke, flames, or extinguishing agent, from any compartment occupied by the crew or passengers; (4) There are means to control ventilation and drafts within the compartment so that the extinguishing agent used can control any fire that may start within the compartment.	Cargo compartment classification that requires a built-in fire extinguishing system. All current production lower cargo compartments on Boeing airplanes are Class C. The main deck cargo compartment on "Combi" airplanes is a Class B compartment and requires a fire extinguishing system by Airworthiness Directive.

Federal Aviation Regulations (FAR), Part 25, Airworthiness Standards: Transport Category Airplanes. Requirements Specific to Oxygen Systems.

FAR Section	Requirement	Comments
25.1439 Protective Breathing Equipment [Doc. No. 5066, 29 FR 18291, Dec. 24, 1964, as amended by Amdt. 25-38, 41 FR 55468, Dec. 20, 1976]	(a) If there is a class A, B, or E cargo compartment, protective breathing equipment must be installed for the use of appropriate crewmembers. In addition, protective breathing equipment must be installed in each isolated separate compartment in the airplane, including upper and lower lobe galleys, in which crewmember occupancy is permitted during flight for the maximum number of crewmembers expected to be in the area during any operation. (b) For protective breathing equipment required by paragraph (a) of this section or by any operating rule of this chapter, the following apply: (1) The equipment must be designed to protect the flight crew from smoke, carbon dioxide, and other harmful gases while on flight deck duty and while combating fires in cargo compartments. (2) The equipment must include-- (i) Masks covering the eyes, nose, and mouth; or (ii) Masks covering the nose and mouth, plus accessory equipment to cover the eyes. (3) The equipment, while in use, must allow the flight crew to use the radio equipment and to communicate with each other, while at their assigned duty stations. (4) The part of the equipment protecting the eyes may not cause any appreciable adverse effect on vision and must allow corrective glasses to be worn. (5) The equipment must supply protective oxygen of 15 minutes duration per crewmember at a pressure altitude of 8,000 feet with a respiratory minute volume of 30 liters per minute BTPD. If a demand oxygen system is used, a supply of 300 liters of free oxygen at 70 deg. F. and 760 mm. Hg. Pressure is considered to be of 15-minute duration at the prescribed altitude and	Crew oxygen masks meet TSO-C78 & TSO-C89

FAR Section	Requirement	Comments
25.1439 (Cont.)	minute volume. If a continuous flow protective breathing system is used (including a mask with a standard rebreather bag) a flow rate of 60 liters per minute at 8,000 feet (45 liters per minute at sea level) and a supply of 600 liters of free oxygen at 70 deg. F. and 760 mm. Hg. pressure is considered to be of 15- minute duration at the prescribed altitude and minute volume. BTPD refers to body temperature conditions (that is, 37 deg. C., at ambient pressure, dry). (6) The equipment must meet the requirements of paragraphs (b) and (c) of Sec. 25.1441.	
Sec. 25.1441 Oxygen equipment and supply.	(a) If certification with supplemental oxygen equipment is requested, the equipment must meet the requirements of this section and Secs. 25.1443 through 25.1453. (b) The oxygen system must be free from hazards in itself, in its method of operation, and in its effect upon other components. (c) There must be a means to allow the crew to readily determine, during flight, the quantity of oxygen available in each source of supply. (d) The oxygen flow rate and the oxygen equipment for airplanes for which certification for operation above 40,000 feet is requested must be approved.	Cabin altitude pressure can not exceed 40,000 ft.
Sec. 25.1443 Minimum mass flow of supplemental oxygen.	(b) If demand equipment is installed for use by flight crewmembers, the minimum mass flow of supplemental oxygen required for each crewmember may not be less than the flow required to maintain, during inspiration, a mean tracheal oxygen partial pressure of 122 mm. Hg., up to and including a cabin pressure altitude of 35,000 feet, and 95 percent oxygen between cabin pressure altitudes of 35,000 and 40,000 feet, when breathing 20 liters per minute BTPS. In addition, there must be means to allow the crew to use undiluted oxygen at their discretion. (c) For passengers and cabin attendants, the minimum mass flow of supplemental oxygen required for each person at various cabin pressure altitudes may not be	Analysis per SAE AIR 825B will show the required quantity of oxygen in LPM-NTPD.

FAR Section	Requirement	Comments
Sec. 25.1443 (Cont.)	less than the flow required to maintain, during inspiration and while using the oxygen equipment (including masks) provided, the following mean tracheal oxygen partial pressures: (1) At cabin pressure altitudes above 10,000 feet up to and including 18,500 feet, a mean tracheal oxygen partial pressure of 100 mm. Hg. When breathing 15 liters per minute, BTPS, and with a tidal volume of 700 cc. With a constant time interval between respirations. (2) At cabin pressure altitudes above 18,500 feet up to and including 40,000 feet, a mean tracheal oxygen partial pressure of 83.8 mm. Hg. When breathing 30 liters per minute, BTPS, and with a tidal volume of 1,100 cc. with a constant time interval between respirations.	
Sec. 25.1445 Equipment standards for the oxygen distributing system.	(a) When oxygen is supplied to both crew and passengers, the distribution system must be designed for either-- (1) A source of supply for the flight crew on duty and a separate source for the passengers and other crewmembers; or (2) A common source of supply with means to separately reserve the minimum supply required by the flight crew on duty.	The crew and passenger systems are separate.
25.1447(c)(1) Equipment standards for oxygen dispensing units.	(c) If certification for operation above 25,000 feet is requested, there must be oxygen dispensing equipment meeting the following requirements: (1) There must be an oxygen dispensing unit connected to oxygen supply terminals immediately available to each occupant, wherever seated, and at least two oxygen dispensing units connected to oxygen terminals in each lavatory. The total number of dispensing units and outlets in the cabin must exceed the number of seats by at least 10 percent. The extra units must be as uniformly distributed throughout the cabin as practicable. If certification for operation above 30,000 feet is requested, the dispensing units providing the required oxygen flow must be automatically presented to the occupants before the cabin pressure altitude exceeds 15,000 feet. The crew must be provided with a manual means of making the dispensing units immediately available in the event of failure of the automatic system.	There must be an extra 10% of oxygen masks distributed through out the aircraft.

FAR Section	Requirement	Comments
25.1450 Chemical oxygen generators. [Amdt. 25-41, 42 FR 36971, July 18, 1977]	(a) For the purpose of this section, a chemical oxygen generator is defined as a device which produces oxygen by chemical reaction. (b) Each chemical oxygen generator must be designed and installed in accordance with the following requirements: (1) Surface temperature developed by the generator during operation may not create a hazard to the airplane or to its occupants. (2) Means must be provided to relieve any internal pressure that may be hazardous. (c) In addition to meeting the requirements in paragraph (b) of this section, each portable chemical oxygen generator that is capable of sustained operation by successive replacement of a generator element must be placarded to show-- (1) The rate of oxygen flow, in liters per minute; (2) The duration of oxygen flow, in minutes, for the replaceable generator element; and (3) A warning that the replaceable generator element may be hot, unless the element construction is such that the surface temperature cannot exceed 100 degrees F.	
Sec. 25.1453 Protection of oxygen equipment from rupture.	Oxygen pressure tanks, and lines between tanks and the shutoff means, must be-- (a)Protected from unsafe temperatures; and (b) Located where the probability and hazards of rupture in a crash landing are minimized.	

Federal Aviation Regulations (FAR), Part 25, Airworthiness Standards: Transport Category Airplanes. Requirements Specific to Fuel Tank and Engine Fire Protection.

FAR Section	Requirement	Comments
Sec. 25.901 Installation. [Doc. No. 5066, 29 FR 18291, Dec. 24, 1964, as amended by Amdt. 25-23, 35 FR 5676, Apr. 8, 1970; Amdt. 25-40, 42 FR 15042, Mar. 17, 1977; Amdt. 25-46, 43 FR 50597, Oct. 30, 1978]	(c) For each powerplant and auxiliary power unit installation, it must be established that no single failure or malfunction or probable combination of failures will jeopardize the safe operation of the airplane except that the failure of structural elements need not be considered if the probability of such failure is extremely remote.	
Sec. 25.954 Fuel system lightning protection. [Amdt. 25-14, 32 FR 11629, Aug. 11, 1967]	The fuel system must be designed and arranged to prevent the ignition of fuel vapor within the system by-- (a) Direct lightning strikes to areas having a high probability of stroke attachment; (b) Swept lightning strokes to areas where swept strokes are highly probable; and (c) Corona and streamering at fuel vent outlets.	
Sec. 25.969 Fuel tank expansion space. [Amdt. 25-11, 32 FR 6913, May 5, 1967]	Each fuel tank must have an expansion space of not less than 2 percent of the tank capacity. It must be impossible to fill the expansion space inadvertently with the airplane in the normal ground attitude. For pressure fueling systems, compliance with this section may be shown with the means provided to comply with Sec. 25.979(b).	

FAR Section	Requirement	Comments
Sec. 25.981* Fuel tank temperature. [Amdt. 25-11, 32 FR 6913, May 5, 1967] *25.981 has been revised by NPRM 99-18, not yet formally released.	(a) The highest temperature allowing a safe margin below the lowest expected auto ignition temperature of the fuel in the fuel tanks must be determined. (b) No temperature at any place inside any fuel tank where fuel ignition is possible may exceed the temperature determined under paragraph (a) of this section. This must be shown under all probable operating, failure, and malfunction conditions of any component whose operation, failure, or malfunction could increase the temperature inside the tank.	
Sec. 25.1181 Designated fire zones; regions included. [Doc. No. 5066, 29 FR 18291, Dec. 24, 1964, as amended by Amdt. 25-11, 32 FR 6913, May 5, 1967; Amdt. 25-23, 35 FR 5677, Apr. 8, 1970; Amdt. 25-72, 55 FR 29785, July 20, 1990]	(a) Designated fire zones are-- (1) The engine power section; (2) The engine accessory section; (3) Except for reciprocating engines, any complete powerplant compartment in which no isolation is provided between the engine power section and the engine accessory section; (4) Any auxiliary power unit compartment; (5) Any fuel-burning heater and other combustion equipment installation described in Sec. 25.859; (6) The compressor and accessory sections of turbine engines; and (7) Combustor, turbine, and tailpipe sections of turbine engine installations that contain lines or components carrying flammable fluids or gases. (b) Each designated fire zone must meet the requirements of Secs. 25.867, and 25.1185 through 25.1203.	

FAR Section	Requirement	Comments
Sec. 25.1189 Shutoff means. [Doc. No. 5066, 29 FR 18291, Dec. 24, 1964, as amended by Amdt. 25-23, 35 FR 5677, Apr. 8, 1970; Amdt. 25-57, 49 FR 6849, Feb. 23, 1984]	(a) Each engine installation and each fire zone specified in Sec. 25.1181(a) (4) and (5) must have a means to shut off or otherwise prevent hazardous quantities of fuel, oil, deicer, and other flammable fluids, from flowing into, within, or through any designated fire zone, except that shutoff means are not required for-- (1) Lines, fittings, and components forming an integral part of an engine; and (2) Oil systems for turbine engine installations in which all components of the system in a designated fire zone, including oil tanks, are fireproof or located in areas not subject to engine fire conditions. (b) The closing of any fuel shutoff valve for any engine may not make fuel unavailable to the remaining engines. (c) Operation of any shutoff may not interfere with the later emergency operation of other equipment, such as the means for feathering the propeller. (d) Each flammable fluid shutoff means and control must be fireproof or must be located and protected so that any fire in a fire zone will not affect its operation. (e) No hazardous quantity of flammable fluid may drain into any designated fire zone after shutoff. (f) There must be means to guard against inadvertent operation of the shutoff means and to make it possible for the crew to reopen the shutoff means in flight after it has been closed. (g) Each tank-to-engine shutoff valve must be located so that the operation of the valve will not be affected by powerplant or engine mount structural failure. (h) Each shutoff valve must have a means to relieve excessive pressure accumulation unless a means for pressure relief is otherwise provided in the system.	
Sec. 25.1191 Firewalls.	(a) Each engine, auxiliary power unit, fuel-burning heater, other combustion equipment intended for operation in flight, and the combustion, turbine, and	

FAR Section	Requirement	Comments
Sec. 25.1191 (Cont.)	tailpipe sections of turbine engines, must be isolated from the rest of the airplane by firewalls, shrouds, or equivalent means. (b) Each firewall and shroud must be-- (1) Fireproof; (2) Constructed so that no hazardous quantity of air, fluid, or flame can pass from the compartment to other parts of the airplane; (3) Constructed so that each opening is sealed with close fitting fireproof grommets, bushings, or firewall fittings; and (4) Protected against corrosion.	
Sec. 25.1195 Fire extinguishing systems. [Doc. No. 5066, 29 FR 18291, Dec. 24, 1964, as amended by Amdt. 25-46, 43 FR 50598, Oct. 30, 1978]	(a) Except for combustor, turbine, and tail pipe sections of turbine engine installations that contain lines or components carrying flammable fluids or gases for which it is shown that a fire originating in these sections can be controlled, there must be a fire extinguisher system serving each designated fire zone. (b) The fire extinguishing system, the quantity of the extinguishing agent, the rate of discharge, and the discharge distribution must be adequate to extinguish fires. It must be shown by either actual or simulated flights tests that under critical airflow conditions in flight the discharge of the extinguishing agent in each designated fire zone specified in paragraph (a) of this section will provide an agent concentration capable of extinguishing fires in that zone and of minimizing the probability of reignition. An individual "one-shot" system may be used for auxiliary power units, fuel burning heaters, and other combustion equipment. For each other designated fire zone, two discharges must be provided each of which produces adequate agent concentration. (c) The fire extinguishing system for a nacelle must be able to simultaneously protect each zone of the nacelle for which protection is provided.	

FAR Section	Requirement	Comments
Sec. 25.1197 Fire extinguishing agents. [Doc. No. 5066, 29 FR 18291, Dec. 24, 1964, as amended by Amdt. 25-38, 41 FR 55467, Dec. 20, 1976; Amdt. 25-40, 42 FR 15044, Mar. 17, 1977]	(a) Fire extinguishing agents must-- (1) Be capable of extinguishing flames emanating from any burning of fluids or other combustible materials in the area protected by the fire extinguishing system; and (2) Have thermal stability over the temperature range likely to be experienced in the compartment in which they are stored. (b) If any toxic extinguishing agent is used, provisions must be made to prevent harmful concentrations of fluid or fluid vapors (from leakage during normal operation of the airplane or as a result of discharging the fire extinguisher on the ground or in flight) from entering any personnel compartment, even though a defect may exist in the extinguishing system. This must be shown by test except for built-in carbon dioxide fuselage compartment fire extinguishing systems for which-- (1) Five pounds or less of carbon dioxide will be discharged, under established fire control procedures, into any fuselage compartment; or (2) There is protective breathing equipment for each flight crewmember on flight deck duty.	
Sec. 25.1199 Extinguishing agent containers. [Doc. No. 5066, 29 FR 18291, Dec. 24, 1964, as amended by Amdt. 25-23, 35 FR 5678, Apr. 8, 1970; Amdt. 25-40, 42 FR 15044,	(a) Each extinguishing agent container must have a pressure relief to prevent bursting of the container by excessive internal pressures. (b) The discharge end of each discharge line from a pressure relief connection must be located so that discharge of the fire extinguishing agent would not damage the airplane. The line must also be located or protected to prevent clogging caused by ice or other foreign matter. (c) There must be a means for each fire extinguishing agent container to indicate that the container has discharged or that the charging pressure is below the established minimum necessary for proper functioning.	

FAR Section	Requirement	Comments
Mar. 17, 1977] Sec. 25.1199 (Cont.)	(d) The temperature of each container must be maintained, under intended operating conditions, to prevent the pressure in the container from-- (1) Falling below that necessary to provide an adequate rate of discharge; or (2) Rising high enough to cause premature discharge. (e) If a pyrotechnic capsule is used to discharge the extinguishing agent, each container must be installed so that temperature conditions will not cause hazardous deterioration of the pyrotechnic capsule.	
Sec. 25.1201 Fire extinguishing system materials.	(a) No material in any fire extinguishing system may react chemically with any extinguishing agent so as to create a hazard. (b) Each system component in an engine compartment must be fireproof.	
Sec. 25.1207 Compliance. [Amdt. 25-46, 43 FR 50598, Oct. 30, 1978]	Unless otherwise specified, compliance with the requirements of Secs. 25.1181 through 25.1203 must be shown by a full scale fire test or by one or more of the following methods: (a) Tests of similar powerplant configurations; (b) Tests of components; (c) Service experience of aircraft with similar powerplant configurations; (d) Analysis.	

AIRWORTHINESS DIRECTIVES

AD 93-07-15, Amendment 39-8547

Requires Modification of all Main Deck Class B compartments either to Class C; to carry cargo only in approved flame penetration resistant containers; cover cargo with fire containment covers or in fire containment containers and other improvements; or install a 90 minute fire extinguishing system of Halon 1301 providing 5% knockdown or 3% sustained concentrations.

FAR AMENDMENT

Amendments 25-93 and 121-269

Requires all Class D cargo compartments to be upgraded to Class C.

ADVISORY CIRCULARS

AC 25.1309-1A, Systems Design and Analysis

Purpose. This Advisory Circular (AC) describes various acceptable means for showing compliance with the requirements of 25.1309(b), (c), and (d) of the Federal Aviation Regulations (FAR). These means are intended to provide guidance for the experienced engineering and operational judgment that must form the basis for compliance findings. They are not mandatory. Other means may be used if they show compliance with this section of the FAR.

This AC provides guidance on the "Fail-Safe Design Concept", analysis of failure conditions, qualitative and quantitative assessments, Functional Hazard Assessments, etc.

AC 120-42A, Extended Range Operation with Two-Engine Airplanes (ETOPS)

Purpose. This advisory circular (AC) states an acceptable means, but not the only means, for obtaining approval under FAR Section 121.161 for two-engine airplanes to operate over a route that contains a point farther than one hour flying time at the normal one-engine inoperative cruise speed (in still air) from an adequate airport. Specific criteria are included for deviation of 75 minutes, 120 minutes or 180 minutes from an adequate airport.

This AC limits airplane range on two-engine airplanes to diversion time plus a 15 minute holding and an approach and landing.

REFERENCES

[1] United States Department of Transportation, Federal Aviation Regulations, Part 25, Airworthiness Standards: Transport Category Airplanes, through Amendment 25-98.

[2] Factory Mutual Research Corporation, *Packaged, Self-Contained, Fire Suppression System for use in Remote Areas Where a Normal Water Supply is not Available for Structural Fire Fighting*, Serial No. 15974, May 14, 1965.

[3] FAA Report FAA-ADS-73, *Characteristics of Fire in Large Cargo Aircraft*, Julius J. Gassmann, March 1966.

[4] Factory Mutual Research Corporation, *Evaluation of the Fire Extinguishing Characteristics of "Freon" FE 1301 on Flammable Liquid Fires*, for E.I. Du Pont De Nemours & Company, Inc., Serial No. 16234.1, February 21, 1967.

[5] Factory Mutual Research Corporation, *Extinguishment of Charcoal, Wood and Paper Fires by Total Flooding with "Freon" FE 1301/Air and Carbon Dioxide/Air Mixtures*, Serial No. 16234.1, July 28, 1967.

[6] Factory Mutual Research Corporation, *Determination of Design Criteria and Performance Testing of Prototype Fire Extinguishing Systems Using "Freon" FE 1301*, M.J. Miller for E.I. Du Pont De Nemours & Co. Serial No. 16234.1, October 1968.

[7] FAA Report FAA-RD-70-42, *Characteristics of Fire in Large Cargo Aircraft (Phase II)*, Julius J. Gassmann, September 1970.

[8] FAA Report FAA-RD-71-68, *Fire Extinguishing Methods for New Passenger/Cargo Aircraft*, Julius J. Gassmann and Richard G. Hill, November 1971.

[9] FAA Report DOT/FAA/CT-84/21, *Suppression and Control of Class C Cargo Compartments Fires*, David R. Blake, February 1985.

[10] DuPont Technical Bulletin B-29E, *Halon 1301 Fire Extinguishant*, December 1985.

[11] FAA Report DOT/FAA/CT-86/5, *Halon Extinguisher Agent Behavior in a Ventilated Small Aircraft*, Gerald R. Slusher, Joseph Wright and James Damaree, June 1986.

[12] NFPA 12A, *Standard on HALON 1301 Fire Extinguishing Systems*, 1987 Edition.

[13] FAA Report DOT/FAA/CT-89/32*, Fire Hazards of Aerosol Cans in Aircraft Cargo Compartments*, David R. Blake, December 1989.

[14] Civil Aviation Authority, CAA Paper 91003, *Cargo Bay Fire Suppression*, P. C. Cooke, P. C. Howell & D. J. Spring, March 1991.

[15] FAA Report DOT/FAA/AR-TN95/78, *Performance of Improved Aerosol Cans Subjected to an Aircraft Fire*, Christopher Hawthorne and David Blake, December 1995.

[16] FAA Report DOT/FAA/AR-96/5*, Evaluation of Large Class B Cargo Compartment's Fire Protection*, David Blake, June 1996.

[17] FAA Report DOT/FAA/AR-TN98/32*, Cargo Compartment Fire Protection in Large Commercial Transport Aircraft*, David Blake, Timothy Marker, Richard Hill, John Reinhardt and Constantine Sarkos, July 1998.

[18] USAF Report AFFDL-78-66, *Test and Evaluation of Halon 1301 and Nitrogen Inerting Against 23mm HEI Projectiles*, C. L. Anderson, May 1978.

[19] USAA Report VRADCOM-TR-80-D-33, *A Study of the Blast and Combustion Over-Pressure Characteristics of the 23mm High Explosive Incendiary - Tracer (HEI-T)*, Pedriani et al., November 1980.

[20] FAA Report FAA-RD-71-42, *Inerted Fuel Tank Oxygen Concentration Requirements*, August 1971.

[21] WADC-TR-55-418, *Inerting Conditions for Aircraft Fuel Tanks*, Stewart et al., September 1955.

[22] Dougal Drysdale, *An Introduction to Fire Dynamics*, John Wiley & Sons, 1985.

[23] Aviation Rulemaking Advisory Committee (ARAC), Fuel Tank Harmonization Working Group, Task Group 3 – Fuel Tank Inerting, Final Report, July 1998.

[24] FAA Report No. FAA-RD-72-53, Performance Of A DC-9 Aircraft Liquid Nitrogen Fuel Tank Inerting System, E. P. Kluegg, W. C. McAdoo, and W. E. Neese, August 1972 (AD748116).

[25] FAA AC-20-100, General Guidelines for Measuring Fire Extinguishing Agent Concentrations in Powerplant Compartments, September 21, 1977.

[26] Aviation Rulemaking Advisory Committee (ARAC), report, "Fuel Tank Harmonization Working Group Final Report," July 1998.

About the Authors

Thomas L. Reynolds

Tom is an Associate Technical Fellow in the Boeing Seattle Phantom Works, Systems and Subsystems Technology Group. Tom received his B.S. in Engineering and Science from Seattle University in 1972 and a Master of Engineering from the Engineering Executive Program at the University of California-Los Angeles in 1977. He has been a proposal and program manager for advanced technology projects and contract studies with the NASA, FAA, USAF, and U.S. Navy. These projects have encompassed a broad range of technologies and systems. Tom has written and presented 12 technical papers on aviation safety, a number of which have been published. He is internationally recognized for his work in the area of passenger cabin safety and was chairman of the AIA Committee that published an industry position paper on water mist systems for post-crash fire protection. Tom has been a Boeing employee for 24 years in several capacities: manager of Technology and Product Development, project engineer, overseas field representative, manufacturing research engineer, avionics systems and flight test engineer, and a Boeing Associate Technical Fellow for the past 2½ years.

Delbert B. Bailey

Bert is an Associate Technical Fellow in Boeing Commercial Airplane Group. Bert received his B.S. in Mechanical Engineering from Iowa State University in 1983. He started his career at Boeing working on a wide range of military projects involving hydraulic and pneumatic system designs. In 1987 Bert started specializing in oxygen systems design for use in both commercial and military applications. He has developed, designed, tested and certified new systems that use gas, chemical and liquid forms of oxygen storage.

The FAA has granted Bert certification tickets as a Designated Engineering Representative (DER) and a Designated Alteration Station (DAS) to find compliance to Federal Regulations for oxygen systems. The JAA has also authorized him to find compliance for oxygen systems on European certified aircraft. Bert is a chair member on the SAE, A-10 Aircraft Oxygen Equipment Committee. In connection with the SAE Committee Bert has written and presented three technical papers related to oxygen system design

Daniel F. Lewinski

Dan received a B.S. in Mechanical Engineering from Marquette University in 1981. He joined Boeing in 1981 and has spent his career working on airplane environmental control systems, including fire detection and protection systems. Dan has been working extensively in airplane fire protection systems since 1988. From 1992 through 1994, Dan led a development effort with a supplier to develop a new technology Halon regulator that would provide constant mass flow rate to cargo compartments throughout airplane environments. In 1995, Dan became an FAA Designated Engineering Representative (DER) for certification of aircraft fire detection and suppression systems. Dan has been involved with numerous airplane certification programs for the airworthiness design certification of cargo compartment and crew rest fire protection systems.

Conrad M. Roseburg

Conrad is an Associate Technical Fellow at Boeing Commercial Airplanes Group. He is a part of the Fuels - Enabling Technology group, an organization that supports cross-program fuels technology issues, concerns, and computer analysis programs. He has more than 25 years of engineering technology experience in propulsion systems including installations, controls, fire protection and safety, engine inlets, auxiliary power units, and fuel systems.

Conrad has supported projects such as the NASA high-speed research program responsible for fuel system studies; the development, flight testing, and U.S. Air Force certification of the B-2 fuel system; and the redesign of the DarkStar (UAV) fuel system, where he was the equipment manager responsible for defining subsystem and component design requirements, certification analysis, and testing requirements. Conrad has been certified as a FAA Designate Engineering Representative (DER) on several Boeing commercial airplane programs and is the Commercial Airplanes representative to the SAE AE-5 Aerospace Equipment - Fuels Technology Committee.

REPORT DOCUMENTATION PAGE

Form Approved
OMB No. 0704-0188

Public reporting burden for this collection of information is estimated to average 1 hour per response, including the time for reviewing instructions, searching existing data sources, gathering and maintaining the data needed, and completing and reviewing the collection of information. Send comments regarding this burden estimate or any other aspect of this collection of information, including suggestions for reducing this burden, to Washington Headquarters Services, Directorate for Information Operations and Reports, 1215 Jefferson Davis Highway, Suite 1204, Arlington, VA 22202-4302, and to the Office of Management and Budget, Paperwork Reduction Project (0704-0188), Washington, DC 20503.

1. AGENCY USE ONLY (*Leave blank*)

2. REPORT DATE
May 2001

3. REPORT TYPE AND DATES COVERED
Final Contractor Report

4. TITLE AND SUBTITLE
Onboard Inert Gas Generation System/Onboard Oxygen Gas Generation System (OBIGGS/OBOGS) Study
Part I: Aircraft System Requirements

5. FUNDING NUMBERS
WU–728–50–20–00
NAS1–20341
Task Order 11

6. AUTHOR(S)
Thomas L. Reynolds, Delbert B. Bailey,
Daniel F. Lewinski, and Conrad M. Roseburg

7. PERFORMING ORGANIZATION NAME(S) AND ADDRESS(ES)
Boeing Commerical Airplanes Group
Seattle, Washington

8. PERFORMING ORGANIZATION REPORT NUMBER
E–12780

9. SPONSORING/MONITORING AGENCY NAME(S) AND ADDRESS(ES)
National Aeronautics and Space Administration
Washington, DC 20546–0001

10. SPONSORING/MONITORING AGENCY REPORT NUMBER
NASA CR—2001-210903
D950–10529–1

11. SUPPLEMENTARY NOTES
Project Manager, Bryan Palaszewski, Turbomachinery and Propulsion Systems Division, NASA Glenn Research Center, organization code 5830, 216–977–7493.

12a. DISTRIBUTION/AVAILABILITY STATEMENT
Unclassified - Unlimited
Subject Category: 03 Distribution: Nonstandard
Available electronically at http://gltrs.grc.nasa.gov/GLTRS
This publication is available from the NASA Center for AeroSpace Information, 301–621–0390.

12b. DISTRIBUTION CODE

13. ABSTRACT ***(Maximum 200 words)***

The purpose of this technology assessment is to define a multiphase research study program investigating Onboard Inert Gas Generation Systems (OBIGGS) and Onboard Oxygen Generation Systems (OBOGS) that would identify current airplane systems design and certification requirements (Subtask 1); explore state-of-the-art technology (Subtask 2); develop systems specifications (Subtask 3); and develop an initial system design (Subtask 4). If feasible, consideration may be given to the development of a prototype laboratory test system that could potentially be used in commercial transport aircraft (Subtask 5). These systems should be capable of providing inert nitrogen gas for improved fire cargo compartment fire suppression and fuel tank inerting and emergency oxygen for crew and passenger use. Subtask 1 of this research study, presented herein, defines current production aircraft certification requirements and design objectives necessary to meet mandatory FAA certification requirements and Boeing design and performance specifications. These requirements will be utilized for baseline comparisons for subsequent OBIGGS/OBOGS application evaluations and assessments.

14. SUBJECT TERMS
Fire prevention; Fire protection; Gelled propellants; Fuels; Materials; Aviation safety; Aircraft design

15. NUMBER OF PAGES
178

16. PRICE CODE

17. SECURITY CLASSIFICATION OF REPORT	18. SECURITY CLASSIFICATION OF THIS PAGE	19. SECURITY CLASSIFICATION OF ABSTRACT	20. LIMITATION OF ABSTRACT
Unclassified	Unclassified	Unclassified	