DOCKET NO. SA-228

EXHIBIT NO. 20R

NATIONAL TRANSPORTATION SAFETY BOARD

WASHINGTON, D.C.

FAA Advisory Circular 25-9A

U.S. Department of Transportation
Federal Aviation Administration

Advisory Circular

Subject: SMOKE DETECTION, PENETRATION, AND EVACUATION TESTS AND RELATED FLIGHT MANUAL EMERGENCY PROCEDURES

Date: 1/6/94
Initiated by: ANM-110

AC No: 25-9A
Change:

1. PURPOSE. This advisory circular (AC) provides guidelines for the conduct of certification tests relating to smoke detection, penetration, and evacuation, and to evaluate related Airplane Flight Manual (AFM) procedures. These guidelines may be used to reduce the number of decisions based solely on judgment in conducting tests and evaluating test results. While this AC is not mandatory, it offers a method of demonstrating compliance with the applicable airworthiness requirements. In some cases designers have chosen to design beyond what is prescribed in the airworthiness requirements. A limited discussion of the use of such designs/devices is included. This AC does not constitute a regulation and is not intended to require anything beyond that specifically required by the regulations.

2. CANCELLATION. Advisory Circular 25-9, "Smoke Detection, Penetration, and Evacuation Tests and Related Flight Manual Emergency Procedures," dated July 29, 1986, is canceled.

3. RELATED FAR SECTIONS. The related sections of the Federal Aviation Regulations (FAR), as amended through Amendment 25-74, are as follows. Where applicable, corresponding sections of Part 4b of the Civil Air Regulations (CAR) of 1962 follow each cited Part 25 section of the FAR.

25.831/4b.371/121.219	Ventilation.
25.854/121.308	Lavatory fire protection.
25.855/4b.382,384	Cargo or baggage compartments.
25.857/4b.383	Cargo compartment classification.
25.858	Cargo compartment fire detection systems.
25.869/25.1359/4b.626	Fire protection: systems/Electrical system fire and smoke protection.
25.1301/4b.600,601	Function and installation.
25.1309/4b.606	Equipment, systems, and installations.
25.1439/4b.380,651/121.337	Protective breathing equipment.
25.1585/4b.742	Operating procedures.
Part 25,Appendix 'F' (Part 1)	Test Criteria and Procedures for Showing Compliance with § 25.853, or 25.855
121.221	Fire precaution.

121.485/121.523	Flight time limitations: Three or more pilots and additional flight crewmember.

4. RELATED READING MATERIAL.

a. Advisory Circulars (AC).

AC 25-7	Flight Test Guide for Certification of Transport Category Airplanes
AC 25-16	Electrical Fault and Fire Prevention and Protection
AC 25-17	Transport Airplane Cabin Interiors Crashworthiness Handbook

Advisory Circulars can be obtained from the U.S. Department of Transportation, M-443.2, Utilization and Storage Section, Washington, D.C. 20590.

b. Technical Standard Orders (TSO).

TSO-C1c	Cargo and Baggage Compartment Smoke Detection Instruments
TSO-C11e	Fire Detectors (Thermal Sensing and Ionization Sensing Type)
TSO-C99	Protective Breathing Equipment
TSO-C116	Crewmember Protective Breathing Equipment

Technical Standard Orders can be obtained from the Federal Aviation Administration (FAA), Aircraft Certification Service, Aircraft Engineering Division, Technical Analysis Branch (AIR-120), 800 Independence Ave. S.W., Washington, D.C. 20591.

c. Society of Automotive Engineers (SAE) Documents.

AS 8031	Personal Protective Devices for Toxic and Irritating Atmospheres, Air Transport Crew Members
AS 8036	Fire Detection Instruments, cargo compartment
AS 8047	Performance Standard for Cabin Crew Portable Protective Breathing Equipment for Use During Aircraft Emergencies

Society of Automotive Engineers documents can be obtained from the SAE Inc., 400 Commonwealth Drive, Warrendale, Pennsylvania, 15096.

d. Federal Aviation Administration Orders.

8110.4	Type Certification
8320.15	Implementation of Systems and Powerplant Maintenance Requirements
8110.8	Engineering Flight Test Guide for Transport Category Airplanes

Federal Aviation Administration Orders can be obtained from Document Inspection Facility (Attention: APA-220), Federal Aviation Administration, 800 Independence Ave. S.W., Washington, D.C. 20591; (202) 267-3484.

e. Others.

(1) "Fire Detector Response in Airplane Application" by Steve J. Wiersma and Robert G. McKee of the Fire Research Department, SRI International, Menlo Park, California. This article was published in the August/September, 1978 issue of Aviation and was based on a SRI International report by N.J. Alvares and R.G. McKee titled, "The Response of Smoke Detectors to Pyrolysis and Combustion Products from Airplane Interior Materials," prepared by NASA under contract NAS2-8538. Reference was also made in this article to "Fire Detection Devices," Aviation Engineering and Maintenance, November/December, 1977.

(2) National Bureau of Standards Information Report NBSIR-77 titled "Instruction Manual for NBS Photometric Smoke Measurement System" by Richard W. Bukowski, from the Center for Fire Research, Institute for Applied Technology, National Bureau of Standards, Washington, D.C. 20234.

5. LIMITATIONS. The test procedures in this AC apply to smoke detection, smoke penetration, and smoke evacuation after limited duration smoke generation in cargo, storage, baggage compartments, equipment bays, equipment cooling systems, and other non-continuously occupied areas (e.g., galleys, lavatories, or crew rest areas).

Protection against continuously generated smoke in the cockpit, although not specifically required by the regulations, is provided by present smoke evacuation procedures. Present smoke evacuation testing demonstrates the ability of the smoke evacuation system to handle smoke emanating from reasonably probable continuous smoke sources.

6. BACKGROUND.

a. Part 4b of the CAR was recodified in 1965 as Part 25 of the FAR. The related policy material contained in Civil Aeronautics Manual (CAM) 4b is applicable to Part 25, as originally recodified, and to current Part 25, except in areas that have been amended since recodification.

b. The development of standardized test procedures was initiated in 1975 with the intent to eliminate subjective evaluations of the smoke detection,

penetration and evacuation procedures used in demonstrating compliance with the applicable sections of Part 25. Though the flammability potential of the interior cabin materials has been reduced since that time, these materials may emit potentially lethal smoke and toxic gases when they are exposed to sufficient heat or are involved in the combustion process. Due to these concerns by the FAA, and National Transportation Safety Board (NTSB) recommendation(s), AC 25-9 was developed and first issued in 1986.

c. This revision of the Advisory Circular (AC) addresses the following issues:

(1) Recommendation of National Academy of Sciences (NAS) Study, 1986.

(i) Subsequent to the release of the AC 25-9, the National Academy of Sciences (NAS), in compliance with Congressional action, made 19 recommendations relating to cabin air quality in their 1986 report, "The Airliner Cabin Environment--Air Quality and Safety." One of the recommendations was that the widespread practice of raising the cabin altitude to a maximum of 10,000 feet to aid in smoke evacuation be investigated and validated, and that paragraph 5b of Advisory Circular 25-9, "Smoke Detection, Penetration, and Evacuation Tests and Related Flight Manual Emergency Procedures," should be clarified with respect to smoke evacuation procedures.

(ii) The FAA contacted all the domestic transport airplane manufacturers and all foreign manufacturers of transport airplanes with U.S. type certificates through their respective airworthiness authorities to obtain relevant smoke evacuation procedures information.

(iii) The FAA received responses from 4 foreign authorities, 2 foreign manufacturers, and 7 domestic manufacturers. The flight manual procedure to raise the cabin altitude in the event of smoke in the passenger cabin or flight deck did not apply to all airplanes and there was a variety of recommended cabin altitudes and smoke clearance procedures listed in the data received. It was clear from the data, however, that the practice of raising cabin altitude to a maximum value (below 10,000 feet) is indeed a viable and effective technique, and has been shown in numerous flight tests to lessen the concentration of smoke and hasten its removal. In all cases, the manufacturers that responded to our inquiry stated that their flight test experience supported the use of this technique. Former paragraph 5b, issued here as paragraph 8b, has been clarified accordingly.

(2) Amendment 25-72 to Part 25 of the FAR, §25.869: Fire protection: systems, Effective July 20, 1990. As part of a clarifying editorial change under Amendment 25-72, all fire protection requirements for electrical systems (§ 25.1359), vacuum systems (§ 25.1433), and oxygen systems (§ 25.1451) were combined and transferred to subpart D, as new § 25.869, under the heading "Fire protection: systems," and Appendix 'F'. Reference to § 25.1359 in this AC has been changed to § 25.869 accordingly.

(3) Amendment 25-74 to Part 25 of the FAR, §25.854: Lavatory fire protection, Effective May 16, 1991. Amendment 25-74 to the FAR added § 25.854, which requires lavatory fire protection. Section 25.854(e) requires that each lavatory must be equipped with a smoke detector system or equivalent that provides a warning light in the cockpit, or provides a warning light or audible warning in the passenger cabin that would be readily detectable by a flight attendant. The same requirement was retroactively applied under § 121.308, effective March 29, 1985, for all airplanes operating under Part 121. Appropriate guidance material has been added in paragraphs 9 to 12 for compliance tests.

(4) Crew Rest Area Smoke Detection Certification Tests. Crew rest areas for flight and cabin crews are generally provided in long range transport category airplanes. "Sleeping quarters are required for flightcrews whenever a pilot is scheduled to fly more than 12 hours during any 24 consecutive hours (§§ 121.485(a) and 121.523(b))." Crew rest areas may be located adjacent to the cockpit, away from the cockpit or remote (upper deck, lower lobe, etc.). Since the crew rest area may not always be occupied, a smoke detection system and equipment for fire fighting have been required, for some of these designs, to minimize the hazards associated with a fire in the crew rest area. Guidance material developed for smoke detection in the crew rest areas is now included in this circular.

The determination of whether a smoke or fire detection system is required in crew rest areas has been developed on a case-by-case basis. In general, when the area has been located in a remote compartment, i.e., above or below the main passenger deck(s) or totally isolated by walls when on the main passenger deck(s), and is not occupied at all times from push-back to disembarking, the FAA has determined that a smoke detection system is required. The requirement has been spelled out in issue papers or special conditions. When the crew rest area is located in the main passenger cabin and is separated only by curtains, the smoke detection systems have not been required.

(5) Status of FAA Research Program on Enhanced Emergency Smoke Venting (Included here for information purposes only, not for any FAR compliance). In compliance with a commitment to Congress, the FAA has reviewed both emergency procedures and airplane ventilating systems capability for in-flight fire smoke removal from passenger cabins. The FAA, National Bureau of Standards, U.S. Air Force, Douglas, and Boeing, among others, participated in that evaluation. Further information on the status of this project and lessons learned may be obtained from:

Manager, Fire Safety Branch, ACD-240
FAA Technical Center
Atlantic City International Airport, New Jersey 08405

(6) Helium Smoke Generators as Test Equipment. In 1991, engineering personnel at FAA Technical Center were issued a patent (#4,994,092) on an invention called the Helium Smoke Generator. The device generates simulated smoke at ambient temperatures having the buoyant properties of smoke produced by a fire. This allows realistic simulation of the buoyant properties of

smoke for use in smoke penetration and evacuation tests. Information on this device may be obtained from:

Manager, Fire Safety Branch, ACD-240
FAA Technical Center
Atlantic City International Airport, New Jersey 08405.

(7) Paper Towel Burn Box Smoke Generator. The "Burn Box" is intended for use in smoke detection system testing in Crew Rest and Lavatory areas. Appendix II provides the data necessary to build and operate an FAA-approved Paper Towel Burn Box Generator.

(8) Continuous Smoke in the Cockpit. Although the FAR does not require the consideration of continuous smoke generation/evacuation, the FAA recommends that the airframe design address this situation. Accordingly, paragraphs 12a(1) and 12e(3) recommend addressing continuous smoke generation/evacuation in the cockpit.

7. SUBJECTS AND DEFINITIONS. For purposes of this AC, the following are applicable:

a. Smoke. The airborne solid and liquid particulates and gases evolved when a material undergoes pyrolysis or combustion, together with the quantity of air that is entrained or otherwise mixed into the mass.

b. Production and detection of smoke. Particulate smoke is a product of incomplete combustion. It is generated in both smoldering and flaming combustion, although the nature of particles and their mode of formation are very different. Smoke from smoldering is similar to that obtained when any carbon based material is heated to temperatures at which there is chemical degradation and evolution of volatiles. The volatiles mix with cool ambient air to give mist consisting of minute droplets of tar and liquids with high boiling points. Smoke from flaming combustion consists entirely of solid particles. While a small portion of these may be produced by ablation of a solid under conditions of high heat flux, most are formed in the gas phase as a result of incomplete combustion and high temperature pyrolysis reactions at low temperature conditions. Smoke may be detected by several methods--ionization, photoelectric light scattering, photoelectric light obscuration, and cloud chamber.

c. Buoyancy and Stratification. A fire generates heat. This heat causes gases in the vicinity of fire to increase in temperature and expand. This produces forces, termed buoyancy, which cause the hot gases to rise and flow away from the fire. Buoyancy forces are responsible for hot gases being expelled through the upper portion of any ventilating openings or through any other suitable leakage path. Hot gases that rise up from a fire due to buoyancy mix with local air and cool down. This causes a reduction in the buoyancy and reduction in the upward mobility of the gases. The gases accumulate in layers or strata. This accumulation of gases in layers is termed as stratification. Buoyancy and stratification of smoke is dependent on a large number of variables--fuel, burn rate, environmental conditions, chamber geometry, leakage paths, etc. A combustible material smoke generator

produces a higher buoyancy smoke than a theatrical smoke generator due to its higher temperature. The smoke from a combustible material smoke generator also spreads quickly and the stratification occurs from top down as the smoke cools in the upper layers. By contrast, the spread from the theatrical smoke generator (without helium modification) occurs slowly and the stratification progresses from floor up.

d. On-board smoke sources.

(1) On board smoke or fire may occur due to several reasons. Probable causes are--failure of electrical equipment (shorted wires), overheating of equipment (loss of thermostats or controlling devices), leakage of hot air from pneumatic ducts or spillage of combustible fluid (hydraulic oil, glycol) on a hot surface. Incidents of on-board fire (excluding engine fires) are extremely rare but they do occur and can compromise safety. Smoke sources should be considered in all airplane compartments which contain combustible materials and potential ignition sources (baggage, cargo, passenger, equipment bay, crew rest area, galley, lavatory, etc.). Fires in inaccessible areas (e.g., equipment bays, Class C cargo compartments) should be assumed to be continuous, i.e., capable of continuously generating products of combustion until it can be visually verified that the fire has been extinguished. This is required for the development of fire suppression procedures and to show compliance with the control and containment (as well as continued safe flight and landing) requirements specified in §§ 25.831, 25.869, and 25.1309. The adequacy of the smoke control and containment means should be demonstrated during airplane flight tests, see § 25.855.

(2) Failures that cause fire and smoke should be included in the failure assessment conducted under §§ 25.831, 25.869 (previously 25.1359), and § 25.1309. It should be determined, for each failure condition considered for this assessment, whether smoke detectors and specific fire or smoke procedures are warranted and whether the failure or secondary effects should be prevented through the use of isolation, containment, extinguishers, etc. The likelihood of a continuous exposure to smoke may be based on a failure evaluation which would include the sources of failure, contributing materials, failure preventative measures, and smoke control or containment means. The adequacy of the smoke control and the containment means should be verified by smoke tests.

e. Smoke Toxicity. Sections of the FAR containing reference to this or related subjects are §§ 25.831, 25.851, and 25.857. Adverse operating conditions and their effects on the airplane and occupants are addressed in section § 25.1309.

The products of combustion depend on the fuel consumed, the environment (oxygen availability), the rate of combustion and numerous other factors. The fire suppression agent and its products of combustion and decomposition also contribute components. Because of these variables, the toxic levels of smoke and extinguishing agent have not been defined for certification testing. To understand how the methods of compliance for each test have been derived related to the variables of smoke and extinguishing agent, see the discussion under the applicable rules, Appendix I.

f. Light Transmissibility Measuring Device (or Transmissiometer). This instrument is described in the reference material listed in paragraph 3e(2) and paragraphs 9c and 11e(7). Test personnel use this instrument during smoke penetration tests to judge smoke density by measuring a reduction in light transmission. This instrument should not be confused with smoke detectors (photosensitive or ionization type) which are permanently installed on the airplane to warn the flightcrew of the presence of smoke in cargo compartments, galleys, lavatories, equipment bays and equipment cooling systems.

g. Airplane Modifications. Airplane modifications that may require smoke tests include the alteration of, addition to or removal of, pneumatic systems (bleed air, air conditioning, pressurization, ducting and distribution, equipment cooling, etc.), baggage or cargo compartments, interiors, interior seals, cockpit panels, etc. Each modification should be evaluated to determine if smoke testing is required. The assessment should consider all modifications, including those behind and between panels and between panels and the fuselage skin.

8. AIRPLANE FLIGHT MANUAL (AFM) FIRE AND SMOKE PROCEDURES.

a. Section 25.1585(a) requires that information and instructions must be furnished together with recommended procedures for fire. This information must be included in the emergency procedures section of the AFM and should be included in the Operations Manual. The effectiveness of emergency procedures should be evaluated for probable fire scenarios.

b. Section 25.831 allows the use of depressurization within safe limits to evacuate smoke from the cockpit and passenger compartment. A number of manufacturers have developed and tested procedures to aid in smoke evacuation. Those techniques have been found to be effective for the specific airplane models that utilize them. Typically, the AFM procedures call for increasing the cabin altitude to a safe level, such as 10,000 feet. In some cases, the procedures suggest descending to an intermediate altitude, such as 15,000 feet, and completely depressurizing the airplane. In either case, if this procedure is used, the following should be ensured:

(i) The oxygen masks do not automatically deploy,

(ii) Rapid decompression does not cause false fire warnings, and

(iii) Airplane and passenger safety is not compromised.

Some cargo airplanes have a smoke procedure that recommends that the crew turn off the ventilating air, don their oxygen equipment, and gradually raise the cabin altitude to 25,000 feet or more; the purpose being to limit the oxygen supply and thereby controlling a fire until the airplane can descend to land.

c. The AFM, as well as the Operations Manual (if applicable), emergency procedures for fire and smoke should include instructions for the flightcrew

to immediately proceed to the nearest suitable airport for landing when fire is detected. Deviations from this procedure may be allowed if:

(i) It can be visually verified that the fire has been extinguished in compartments which allow access to all areas of the compartment (reliance on observations of absence of smoke or fire detector annunciation is not allowed), and

(ii) Damage assessment indicates it is safe to continue the flight.

d. In the event of an explosion in a cargo compartment equipped with a liner:

(i) Assume the liner is ruptured.

(ii) If equipped with a smoke detection system, assume it is unreliable due to possible damage or ventilation changes caused by loss of the liner integrity.

(iii) If equipped with a fire extinguishing system, the AFM procedure should recommend immediate discharge of the fire extinguishing agent as a precautionary measure.

(iv) The AFM should require or direct the flightcrew to land at the nearest suitable airport.

9. SMOKE TESTS. There are three smoke tests associated with the certification process; smoke detection tests, smoke penetration tests and smoke evacuation tests. Table 1 summarizes the smoke tests required and/or recommended for certification of several common types of airplane compartments. Also listed are the appropriate advisory circular paragraphs and regulatory references for each type of compartment.

Table 1 - Smoke Tests

Cargo Compartments Compartment Classification	Smoke Detection	Smoke Penetration	Advisory Circular References	Related FAR's
Class A	(a)	N/A	9a, 9b, 9c, 10, & 11	§ 25.855, § 25.857, § 25.858, & § 25.1301
Class B	Yes	Yes		
Class C	Yes	Yes		
Class D	(a)	Yes		
Class E	Yes	Yes		

Crew Rest Areas	Smoke Detection	Smoke Penetration	Advisory Circular References	Related FAR's
Curtained area in passenger compartment or flight deck.	N/A	N/A	6c(4), 9a, 9b, 9c, 9d, 10, & 11	§ 25.831 & § 25.1301
In passenger compartment or flight deck with: (i) Curtained entrance.	(a)	N/A		
(ii) Area enclosed by walls, floor to ceiling, and door.	(a)	(b)		
Remote (not in passenger compartment or flight deck).	(a)	(b)		

Lavatories	Smoke Detection	Smoke Penetration	Advisory Circular References	Related FAR's
Lavatories with: (i) Curtained entrance.	Yes	N/A	6c(3), 9a, 9b, 9c, 9d, 10, & 11	§ 25.831, § 25.854, & § 25.1301
(ii) Door.	Yes	(b)		

Galleys	Smoke Detection	Smoke Penetration	Advisory Circular References	Related FAR's
In passenger compartment or flight deck with: (i) Curtained entrance.	(a)	(b)	9a, 9b, 9c, 9d, 10, & 11	§ 25.831 & § 25.1301
(ii) Area enclosed by walls, floor to ceiling, and door.	(a)	(b)		
Remote (not in passenger compartment or flight deck).	(a)	(b)		

Equipment Bays & Equipment Cooling Systems	Smoke Detection	Smoke Penetration	Advisory Circular References	Related FAR's
For all equipment bays and equipment cooling systems.	(a)	Yes	9a, 9b, 9c, 9d, 10, & 11	§ 25.831 & § 25.1301

Cockpits	Smoke Detection	Smoke Penetration	Smoke Evacuation	Advisory Circular References	Related FAR's
For all cockpits.	N/A	N/A	Yes	9b & 12	§ 25.831 & § 25.1301

(a) = Yes, if a smoke detection system is installed.

(b) = Test recommended.

N/A = Test not applicable.

a. Acceptable Smoke Generators for Smoke Detection Tests.

(1) Generators. An appropriate generator should be selected, e.g.,:

(i) Paper Towel Burn Box (see Appendix II);
(ii) Rosco Theatrical smoke generator [see 10a.3)];
(iii) Helium-injected Rosco Theatrical smoke generator;
(iv) A pipe or cigar;
(v) A Woodsman Bee Smoker; or
(vi) Any other acceptable smoke generator.

(2) Fuel. Representative materials should be selected, e.g.,:

(i) Plastic;
(ii) Rags;
(iii) Tobacco;
(iv) Burlap;
(v) Paper; or
(vi) Any other acceptable fuel

b. Acceptable Smoke Generators for Smoke Penetration and Smoke Evacuation Tests.

(1) Smoke Generators. An appropriate smoke generator should be selected, e.g.,:

(i) Cloudmaker Model 11-48 (B, D);
(ii) Farnum Barn Fogger;
(iii) Pepper Fog;
(iv) Cloud Nine (Superseded by Maxi-Mist);
(v) Maxi-Mist;
(vi) Mini-Mist (Suitable for small compartments);
(vii) Rosco Smoke Machine (Model Pro 1500 or Pro 3000); or
(viii) Any other acceptable smoke generator

(2) Fuels. Use the fuel recommended by the smoke generator manufacturer, e.g.,:

(i) Silicon Oil;
(ii) Paraffin Oil;
(iii) Mineral Oil;
(iv) Propylene Glycol or water solutions of propylene glycol;
(v) Ethylene Glycol; or
(vi) Any other acceptable fuel

c. Smoke Penetration Test Equipment and Suppliers for the Alternate Technique (see 11e(7)).

(1) Light Source. Helium Neon Laser Tube outputting light at a wavelength of 632.8 nanometers, manufactured by CW Radiation Co., A Division of Aerotech, 101 Zeta Drive, Pittsburgh, PA 15238.

(2) Photo (Light) Detector. Model UDT 161. Manufactured by United Detector Technology, 3939 Landmark Street, Culver City, CA 90232.

(3) Smoke Generator. Cloudmaker 11-48. Supplied by Testing Machines, Inc., 400 Bayview Ave., Amityville, NY 11701.

d. Airplane Test Conditions. Flight tests are required to demonstrate compartment accessibility, and exclusion of hazardous quantities of smoke or extinguishing agent from entering into compartments occupied by the crew or passengers. Because detector sensitivity and in-flight compartment airflows differ from those found in ground tests, smoke detection tests should also be conducted in flight. For certification tests, the airplane and relevant systems should be in the production configuration.

(1) The compartment accessibility test should be performed during cruise with normal ventilation airflow and normal cabin-to-ambient pressure differential.

(2) The penetration tests should be conducted during cruise and descent at normal cabin-to-ambient pressure differential with:

(i) Normal ventilation flow rate, and

(ii) Under airplane dispatchable ventilation flow rate conditions.

(3) The smoke detection system effectiveness test should be conducted during cruise at normal cabin-to-ambient pressure differential with maximum normal ventilation flow rate. The airplane should be operated in the various dispatchable ventilation and pressurization configurations (one air conditioning pack, two air conditioning packs, unpressurized, etc.) for the cruise condition. The combustible material used for testing should be representative of what would be expected to burn in the area under consideration.

e. Flight Test Hazards. Smoke detection, penetration, and evacuation tests can be hazardous. Test should be conducted with the concurrence of Air Traffic Control. Reduced visibility in the cockpit during these tests may require conduct of tests away from air traffic. Protective breathing equipment and adequate communications must be provided for all crew members, with emphasis on cockpit crew monitoring of cabin crew's safety.

f. Test Limitations.

(1) The tests described have been developed primarily for cargo, storage, or baggage compartments, equipment bays, equipment cooling systems, and other non-continuously occupied areas (e.g., galleys, lavatories and crew rest areas) that are accessible in flight. Modifications of the test procedures or equipment may be needed to validate a test procedure for locations that are not accessible in flight. The effect that the smoke generator has on the test should be considered for small compartments, i.e., galleys, lavatories and crew rest areas where smoke from a large generator may not be appropriate.

(2) The results of these tests are valid only if the airplane is maintained in the condition and configuration that was tested, i.e., the integrity of the compartments, including any seals and liners, is maintained, and the ventilation systems and extinguishing systems are in their certified configuration. It is assumed for test purposes, unless a failure condition is being simulated, that a fire would not damage or destroy the integrity of the ventilation system or the compartment.

10. SMOKE DETECTION TESTS.

a. Background.

(1) Smoke or fire detection system should provide a warning before the fire-

(i) Develops into an uncontrollable or uncontainable condition, or

(ii) Damages liners, wiring, equipment, structure, essential equipment, or critical systems.

Systems which provide a warning within one minute from the start of smoke generation are considered to be in compliance with the requirements of § 25.854 for lavatories and § 25.858 for cargo compartments. If the certification basis precedes Amendment 25-54, or specifically excludes § 25.858, cargo compartment smoke detection should occur within five minutes.

(2) A smoldering fire producing a small amount of smoke in conjunction with the applicable detection time has been selected as a fire or failure condition that could be detected early enough to ensure that the fire and smoke procedures would be effective. Subjective judgment, considering the failure, size of compartment, materials contained in the compartment, and the containment methods and procedures, is needed to assess the significance of a small amount of smoke.

(3) Theatrical type smoke generators produce smoke at rates necessary for smoke penetration tests but often, if operated continuously, produce more smoke than is appropriate for detection tests. These smoke generators are capable of simulating smoke from a vigorous fire which may be capable of destroying an airplane; a fire that should be detected long before it reaches that level of hazard. In addition, the cool smoke produced by a theatrical smoke generator may be unacceptable for testing ceiling mounted detectors because of its lack of buoyancy. It has also been found that smoke particles, unlike the simulated smoke generated by theatrical smoke generators, will be filtered (particles stick to the inside wall of the tubes) in long smoke detector tubing runs.

Notwithstanding these factors, theatrical smoke generators are acceptable for detection tests if the smoke generator is operated for limited intervals to limit the amount of smoke generated. The lack of smoke buoyancy can be overcome by deflecting the smoke upward, and the sticking effect does not result in overly optimistic results if the compartments are small or the

tubing runs short. In any case, theatrical smoke in conjunction with helium may be acceptable as follows:

(i) For detection systems that do not employ long runs of smoke detector suction tubes.

(ii) In situations where the output of other types of smoke generators are either too large or too small or the smoke fouls a sensitive compartment interior. However, the cognizant ACO must approve this before the test is conducted.

b. Objective. The smoke detection test is designed to demonstrate that the smoke detection system installation will detect a smoldering fire producing a small amount of smoke.

c. Test Equipment. The smoke generating equipment used for detection tests should simulate a smoldering fire that produces only a small amount of smoke. Materials that represent the fuel for the probable source of smoke may be burned in a container that is covered with a metal screen. For safety, a fire extinguisher and a metal container lid should be provided. A Beekeeper type smoke generator may be used when some restraint is placed on the quantity of smoke being generated. A pipe or cigar may be a suitable source of smoke for a closet or lavatory size compartment.

A representative material might be two or three crumpled paper towels, if paper towels are used in the lavatory. Similarly, for a crew rest area, crumpled paper towels may be burned as a smoke source if deemed acceptable by the cognizant ACO. The quantities to be burned should be established by the applicant and agreed to by the cognizant ACO. The method of generating smoke, the quantities and materials used, and the test procedures should be documented so that the test can be duplicated, if necessary, at a later date.

A helium injection modification to a theatrical smoke generator (available from the FAA Technical Center) may produce properties close to actual smoke and thus be acceptable for smoke detection tests. A helium smoke generator, however, is not acceptable for installations with long smoke detector tubing runs.

d. Test Procedure.

(1) The smoke should be generated at a location that is critical with respect to the detector's area of coverage.

(i) In cargo compartments, the smoke source should be located in areas where cargo can be loaded and secured by the airplane's onboard loading and restraint system.

(ii) In lavatories, the smoke source should be located at the most probable source, e.g., the waste (paper) receptacle.

(iii) In crew rest areas, the most critical location of the smoke source (e.g., burn boxes) may not be the farthest location from the smoke detection system.

The cognizant ACO should be consulted in establishing the proposed location of the smoke source before conducting the crew rest area smoke detection test.

(2) The smoke generator should produce only a small amount of smoke in order to simulate a smoldering fire.

(3) For new or modified airplane cargo compartments, smoke detection should occur per the criteria stated under paragraph 10a(1).

e. Test Report. The report should provide details of the test set-up, the method, and the data. Pictures and videos may form a part of the test report.

11. SMOKE PENETRATION TESTS.

a. Background.

(1) The purpose of smoke penetration tests is to demonstrate that smoke will not enter occupied compartments of the airplane from cargo, storage or baggage compartments, equipment bays, equipment cooling systems or other non-continuously occupied areas (e.g., galleys, lavatories, or crew rest areas) containing large quantities of smoke. The definition of a "large quantity" of smoke is associated with the rate of smoke generation and the volume of the compartment it must fill.

(2) Except as noted in paragraph 11e(4) below, any penetration of smoke into occupied compartments from cargo, storage, or baggage compartments, equipment bays, equipment cooling systems, or other non-continuously occupied areas (e.g., galleys, lavatories, or crew rest areas) during the tests is unacceptable because the toxicity of the smoke is unpredictable and the smoke exposure might continue or increase to a hazardous level before a landing can be made. The smoke concentrations and exposure time in an actual fire or smoke situation might be well beyond those demonstrated during the limited duration of the smoke penetration tests. Generally, any smoke penetration during the tests demonstrates that the smoke containment means or control methods are unacceptable.

b. Objective. The objective of this test is to demonstrate that a large quantity of smoke generated in cargo, storage, or baggage compartments and other non-continuously occupied areas (e.g., galleys, lavatories, or crew rest areas) will not penetrate into any occupied compartment. This test also demonstrates that a large quantity of smoke generated in equipment bays or equipment cooling systems will not penetrate into the passenger compartment, and if any smoke penetrates into the cockpit, it can be readily removed using the AFM emergency fire and smoke procedures.

c. Limitations. Successful completion of the smoke penetration tests does not relieve the requirement to conduct carbon dioxide, carbon monoxide, and extinguisher tests in complying with §§ 25.831(b) and (c), 25.851 and 25.855.

d. Equipment.

(1) A smoke generator that has the capability to fill the compartment being tested with smoke and keep it filled for the duration of the test should be selected. To save flight test time, it should be verified on the ground that the generator can continuously produce sufficient quantities of smoke to produce a dense concentration in the compartment being tested. The criteria of paragraph 11e(2) should be met with the airplane pressurization and ventilation systems operated to approximate the airflow for the test condition being simulated.

(2) Generally, the theatrical type generators produce smoke at an adequate rate for smoke penetration tests. Certain models of this type generator may not be adequate for some of the larger cargo compartments and it may be necessary to move the generator around the compartment or use multiple generators.

(3) The smoke generator should not produce smoke that is noxious, corrosive, or toxic, and should be capable of immediate shutdown if a hazardous condition develops. Portable protective breathing equipment, with spare breathing gas bottles, should be provided for test personnel.

e. Test Procedure.

(1) The smoke generator(s) should be placed to generate smoke in the Class B, C, D, or E cargo, storage, or baggage compartment, the equipment bay, equipment cooling system, or non-continuously occupied area (e.g., galley, lavatory, or crew rest area) in the position most likely to result in penetration of smoke into occupied areas of the airplane. All lights in occupied compartments and baggage compartments should be on. For some larger compartments, such as a freighter main deck, it may be necessary to use multiple smoke generators to maintain the required smoke density.

(2) Smoke should be generated continuously until the compartment or area is completely filled with smoke. The compartment or test area is considered filled with smoke when an FAA observer, anywhere in the compartment, cannot see his/her hand when it is held approximately 18 inches in front of his/her face unless the hand is silhouetted by a window or interior light. If applicable, the AFM fire and smoke emergency procedures should be initiated no less than 30 seconds after detection.

(3) After the compartment or area is completely filled with smoke, generation should be continued as necessary to maintain the compartment smoke density attained when the compartment is pronounced "full" for an additional fifteen minutes. The fifteen minute test duration can be reduced if it is apparent that a "steady state" condition relative to smoke penetration has been reached and continuing the test will not produce smoke penetration into occupied areas.

The chart at the end of this section summarizes the smoke penetration test procedures described in paragraphs 11e(2) and (3).

(4) The FAA observer in the occupied compartment should verify that smoke does not penetrate occupied compartments (An alternative technique for this determination is discussed under item (7) below). The formation of a light haze indicates that the ventilation requirements of § 25.831(b) are not being met. Except as noted below, smoke should not penetrate occupied compartments.

(i) Wisps of smoke that enter and immediately exit at the occupied compartment boundaries are acceptable as long as a light haze or stratified haze does not form. If this condition (i.e., wisps of smoke at the compartment boundary) occurs, the 15-minute test procedure of paragraph 11e(3) should be followed.

(ii) A crewmember must be able to extinguish fires in Class B cargo, storage, or baggage compartments or other non-continuously occupied areas (e.g., galley, lavatory, or crew rest area). This means that the crewmember must pass through the compartment's smoke barrier or access door at least once. The crewmember entering or exiting the compartment may disturb the normal airflow and cause some smoke to enter the passenger or flightcrew compartment. This is acceptable if the smoke that enters the passenger or flightcrew compartment is dissipated rapidly.

(iii) Equipment bays and open or closed loop equipment cooling systems may interface with the cockpit systems . When penetration tests are conducted in the equipment bay or in the equipment cooling system, a small amount of smoke may penetrate the cockpit. That smoke should dissipate rapidly when the AFM smoke and fire procedures are used.

(5) If the smoke generator(s) do not completely fill and keep the cargo, storage, or baggage compartment, equipment bay, equipment cooling system or other non-continuously occupied area (e.g., galley, lavatory, or crew rest area) filled with smoke, additional tests should be conducted with the generator(s) relocated as necessary.

(6) Section 25.855(i) requires that smoke should not be detected in any adjacent compartment. Smoke penetration tests are conducted in partial compliance with § 25.855(i). Full compliance is shown when all smoke tests and extinguisher tests are completed successfully. The same criteria apply when smoke detectors or extinguishing systems are installed in equipment bays or equipment cooling systems to comply with § 25.831(c) or § 25.1309(c).

(7) <u>An Alternative Technique to determine smoke penetration under Step (4) Above: (Exceptions (i), (ii), and (iii) still apply)</u>. In lieu of the observer making a judgement whether smoke has penetrated into the cabin, a light transmissibility measuring device is used. The light transmissibility should be measured through smoke along a three foot light path using a calibrated photoelectric cell and a laser that produces light with a wavelength of 632.8 nanometers. The light path may be folded provided each path through the smoke is no less than 18 inches. The calibration of the

light transmissibility measuring device should be checked by using "Wratten" filters as outlined in National Bureau of Standards Information Report (NBSIR) 77, dated June 1977, (reference paragraph 11b of the NBSIR) or any other acceptable calibration procedure.

(i) Light transmissibility reading should be taken in the occupied area at seated head height level (4 feet above the floor) and at least 18 inches from the partition between the occupied compartment and the compartment in which the smoke is being generated.

(ii) If visible smoke is present in the occupied compartment, the reading should be taken at a number of points between the armrest and standing head height level (6 feet above the floor), and at least 18 inches away from the partition between the occupied compartment and the compartment in which the smoke is being generated.

(iii) The transmissibility level in any occupied compartment should not be less at any time during the test than it was before the start of the smoke tests, i.e., zero plus any prevailing atmospheric reduction in transmissibility.

Smoke Penetration Test Procedure

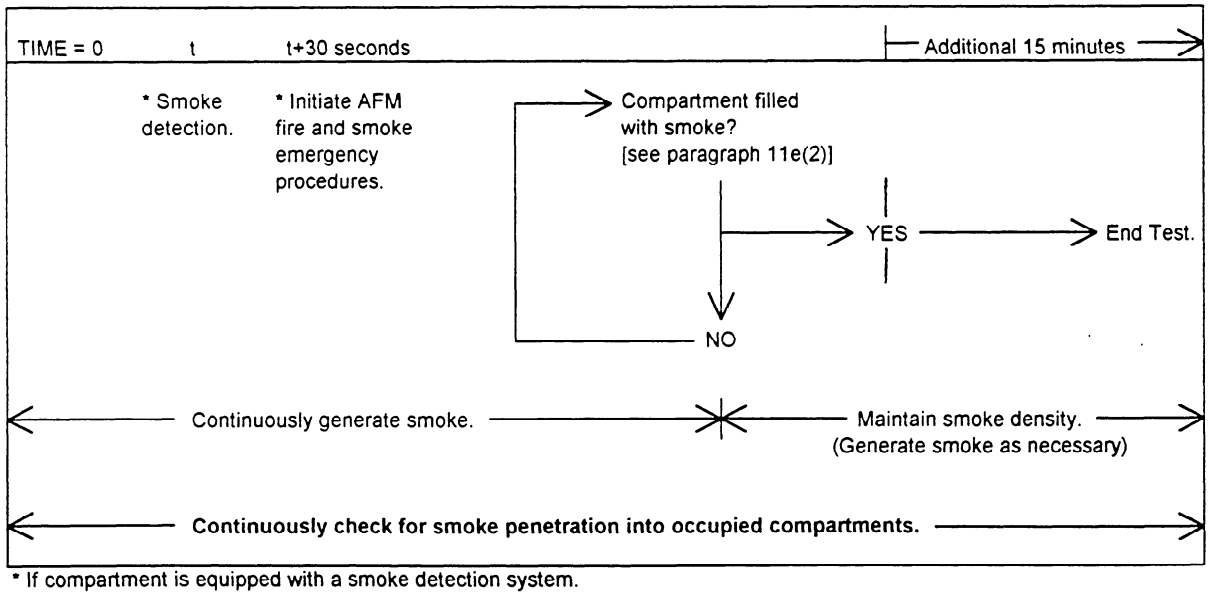

* If compartment is equipped with a smoke detection system.

NOTE: This test procedure is not intended to show compliance with the requirements of § 25.857, § 25.858, and § 25.1301 as they relate to smoke detection.

12. SMOKE EVACUATION TESTS.

a. Background.

(1) Cockpit smoke evacuation tests verify that smoke, from sources within or contiguous with the cockpit, can be readily evacuated as required by § 25.831(d). Typical commercial large transport airplanes are capable of evacuating dense cockpit smoke within approximately 90 seconds after the AFM fire and smoke emergency procedures are initiated. Three minutes is an acceptable maximum time to evacuate smoke from any transport category airplane cockpit. In the case of a cargo conversion supplemental type certificate, the cognizant ACO may accept the original cockpit smoke evacuation test provided it is substantiated by compartment airflow analysis.

The cockpit smoke evacuation test procedure is intended to measure the capability of the smoke clearance procedures against a standard condition, i.e., to clear the cockpit of smoke after the pilot's view is obscured, without any further smoke being generated.

Although the FAR does not require it, it is recommended that the capability to evacuate continuously generated smoke from the cockpit be demonstrated. Equipment and means designed beyond what is prescribed in the regulations may only be used if those means are readily usable and enable the pilot to see all the instruments, switches, working panels/lights, and mechanisms necessary to safely land the airplane in all weather conditions.

(2) Smoke evacuation tests are not required for passenger compartments.

(3) When the ventilation of lavatories, galleys, or crew rest areas is not isolated from that of the passenger compartment, smoke evacuation tests are not required.

b. Objective. The objective of the in-flight smoke evacuation test is to demonstrate that the AFM emergency fire and smoke procedures provide means to clear the cockpit of dense smoke at an acceptable rate. This test should also demonstrate that the flightcrew can use the procedures without introducing any additional hazard.

c. Test Equipment. The same equipment used in smoke penetration tests may be used in smoke evacuation tests (see paragraph 11d(1)).

d. Limitations.

(1) Some airplane designs have automatic cockpit or instrument light dimming features to reduce light intensity for night flight. Smoke may cause the automatic dimming feature to function, thus making instrument visibility more difficult. A manual means to override the dimming control should be provided for each dimming circuit. There should be a procedure that specifies that the light or instrument intensity be turned up, as necessary, when smoke is present in the cockpit.

(2) If it is determined that specific systems, e.g., autopilot, yaw damper, etc., are to be used as part of the smoke evacuation procedure, then their use should be incorporated into the AFM emergency procedures and the systems should be operational for dispatch.

e. Test Procedures. The smoke evacuation tests should be conducted with smoke generated in the cockpit as follows:

(1) The cockpit door or curtain, if installed, should be closed for the test. The crew should don protective breathing equipment as soon as the smoke is evident.

(2) When the cockpit instruments are obscured (dial/panel indicator numbers or letters become indiscernible), smoke generation should be terminated, and the appropriate AFM and operations manual (if applicable) fire and smoke procedures should be initiated. The smoke should be reduced within three minutes such that any residual smoke (haze) does not distract the flightcrew or interfere with flight operations.

(3) Although not mandatory, if the applicant wishes to demonstrate protection from smoke generated by a continuous source in the cockpit, smoke should be generated continuously. The crew should don protective breathing equipment and initiate smoke evacuation procedures as soon as smoke becomes evident and, activate any optional vision enhancement devices, if approved.

Ronald T. Wojnar

RONALD T. WOJNAR
Manager, Transport Airplane Directorate,
Aircraft Certification Service, ANM-100

APPENDIX I

This appendix addresses those rules that may be complied with by the use of smoke detection tests, smoke penetration tests and smoke evacuation tests. This appendix discusses the rules as they relate to the specific test. Certain rules that are complied with by measuring gas concentrations are discussed in a cursory manner, as well, to show that these rules are not to be confused with rules requiring compliance by smoke detection, smoke penetration and smoke evacuation tests.

Section 25.831 has been applied, in the general sense, in consideration of normal operating conditions and failures that could expose the passengers to harmful or hazardous concentrations of gases or vapors. Fuel fumes are to be included in the evaluation [ref. 4b.371]. Smoke, caused by failure, is part of this consideration. Hazardous concentrations of mixed gases and vapors from combustion (smoke) have not been defined. See the discussion under compliance with § 25.857(b).

Section 25.831(b)(1), originally in § 4b.371, addresses exposure to carbon monoxide. Section 4b.371 also addressed fuel fumes and made reference to § 4b.467 [Exhaust system and installation components]. Section 25.831(b)(1) was written to cover carbon monoxide exposure from fuel systems, powerplants and combustion heaters during normal operation and failure conditions. Currently, this rule also applies to ventilation air from turbojet or APU bleed air systems. Methods of compliance with § 25.831(b)(1) are not the subject of this AC.

Section 25.831(b)(2), originally in § 4b.371, addresses exposure to carbon dioxide. The original intent was to address temporary exposure to carbon dioxide extinguishing agent and to define an exposure level when protective breathing equipment should be used. Currently, this specific portion of the rule is under review. Methods of compliance with § 25.831(b)(2) are not the subject of this AC.

Section 25.831(d) addressed the accumulation of hazardous quantities of smoke in the cockpit area. Hazardous quantities of smoke have not been defined. Common certification practice has been to assume that limited electrical fires [possibly other fire sources] within the cockpit or connecting electronic bays may generate enough smoke to be considered hazardous. The cockpit smoke evacuation procedures, addressed in this AC, have been devised as a method to comply with § 25.831(d).

Section 25.851 addresses exposure to extinguishing agents from both portable and built-in extinguishers. This rule can be applied generally where coverage is not provided in other specific rules, for example, § 25.1197, under "Power Plant Fire Protection" and § 25.857, "Cargo Compartment Classification." Verifying exposure concentrations of extinguishing agent applied within an occupied compartment is not the subject of this AC.

Section 25.855(h) establishes the use of flight test when showing compliance with § 25.857 (cargo compartment accessibility, penetration of hazardous

quantities of smoke into occupied areas, and dissipation of extinguishing agent in Class C compartments).

Compliance with § 25.857(b)(2), (c)(3), (d)(2) and (e)(4) is one subject of this AC, i.e., showing there are means of excluding hazardous quantities of smoke, flames, or extinguishing agent, from any compartment occupied by the crew or passengers.

One method of showing there are means of excluding hazardous quantities of smoke and extinguishing agent would be to define all the probable combustion sources within the cargo compartment and combinations of combustion byproducts combined with and without the extinguishing agent, and show that the possible exposure concentrations of these byproducts and extinguishing agents will not exceed human tolerances. In addition to the complication of trying to define the concentrations of all the probable combinations of combustion byproducts and extinguishing agent, the complication exists that the acceptable human tolerance to various combinations of combustion byproducts and extinguishing agent have not been defined. For these reasons, this approach to compliance with § 25.857(b)(2), (c)(3), (d)(2) and (e)(4) has not been attempted.

As a practical method of showing there are means of excluding hazardous quantities of smoke, flame or extinguishing agent, from any compartment occupied by the crew or passengers, the FAA has accepted the use of flame barriers and demonstrations showing the prevention of smoke penetration into occupied areas, i.e., smoke penetration tests.

A small amount of smoke is allowed into the passenger compartment, if a crewmember has to enter into the Class B cargo compartment from the passenger compartment. See the discussion in the Cargo Compartment smoke penetration tests, see 11e.(4).

Section 25.1301 requires that installed equipment function properly when installed. Smoke detection tests and smoke evacuation tests have been used to show that the detection and ventilation systems of galleys, lavatories, and crew rest areas function properly.

Section 25.1309 requires consideration of failures and the effects on occupants. See AC 25.1309-1A. Section 25.1309 is a rule of general applicability which may be applied where specific rules do not apply.

APPENDIX II

PAPER TOWEL BURN BOX SMOKE GENERATOR

The smoke detection testing conducted for crew rest and lavatory areas employing ionization type detection systems uses a smoke generator named the "Burn Box" which is described in the attached figures 1 through 4. The Burn Box consists of an aluminum outer containment box, approximately 9.5" square (figure 1), surrounded/supporting an aluminum inner burn chamber 6.5" X 5.6" X 8.0" (figures 2 and 3). The top (hinged) surface of the inner chamber is a fine mesh steel in order to help contain the ashes of the burning fuel. Quarter sheets of standard 10" X 13.5" lavatory paper towel are folded accordion style (figure 4) and alternately stacked into the inner burn chamber. A match hole is provided on the side of the inner box, with access to this hole by way of a hinged side of the outer containment box. Once the fuel charge is ignited, the hinged side of the containment is closed and the hinged top lid of the outer containment box is opened to allow the smoke to begin escaping from the generator. The time to detection begins at this point.

DESCRIPTION OF OPERATIONS

CAUTION: Provide temporary fire resistant protective coverings for any decorative surfaces or flammable materials which could be affected by heat or smoke from these tests.

(1) Place Burn Box generator(s) at the critical location within the compartment to be tested.

(2) Open top door of the box.

(3) Open top door/screen of the inner box.

(4) Place desired number of folded 1/4 sheets of paper towels (CROWN C-FOLD 241 towels folded accordion style) uniformly on the screen inside the inner box.

(5) Close top door/screen of the inner box.

(6) Close top door of the outer box.

(7) Open side door(s) of outer box(es).

(8) Ignite paper towels inside generator by extended lit match through 3/4 inch diameter hole through front side of inner box (accessible through open side door of outer box). After paper towel(s) are lit, close side door.

(9) After all generators are lit, simultaneously open top door(s) of outer box(es) to release smoke.

(10) Begin time to detection when all box(es) are opened fully.

SELECTING NUMBER OF BOXES TO USE

(1) Crew rest areas utilizing ambient Ionization-type smoke detection systems:

(a) For volumes up to 500 cubic feet use 2 burn boxes with a total of 3 paper towels (see description of operation step 4) 6 quarter sheets folded accordion style in each box. Light either simultaneously or sequenced up to 15 seconds apart.

(b) For volumes greater than 500 cubic feet: scale up fuel (paper towels) by adding 1.5 paper towels for each additional 150 cubic feet. Add Burn Boxes as required, to maintain control of the flame exiting the top of the Burn Box during testing.

(c) Crew rest areas enclosed with curtains, using Ionization type detectors.

(i) If designed with one detector in each bunk, use one burn box with one full sheet of paper towel.

(ii) If crew rest is designed to have one detector protect more than one bunk, use method described in (1) (a) or (b) above, depending on the volume enclosed.

(2) Standard Lavatory with ambient Ionization type detectors:

One Burn Box with 1 sheet of paper towel as fuel placed near the waste receptacle.

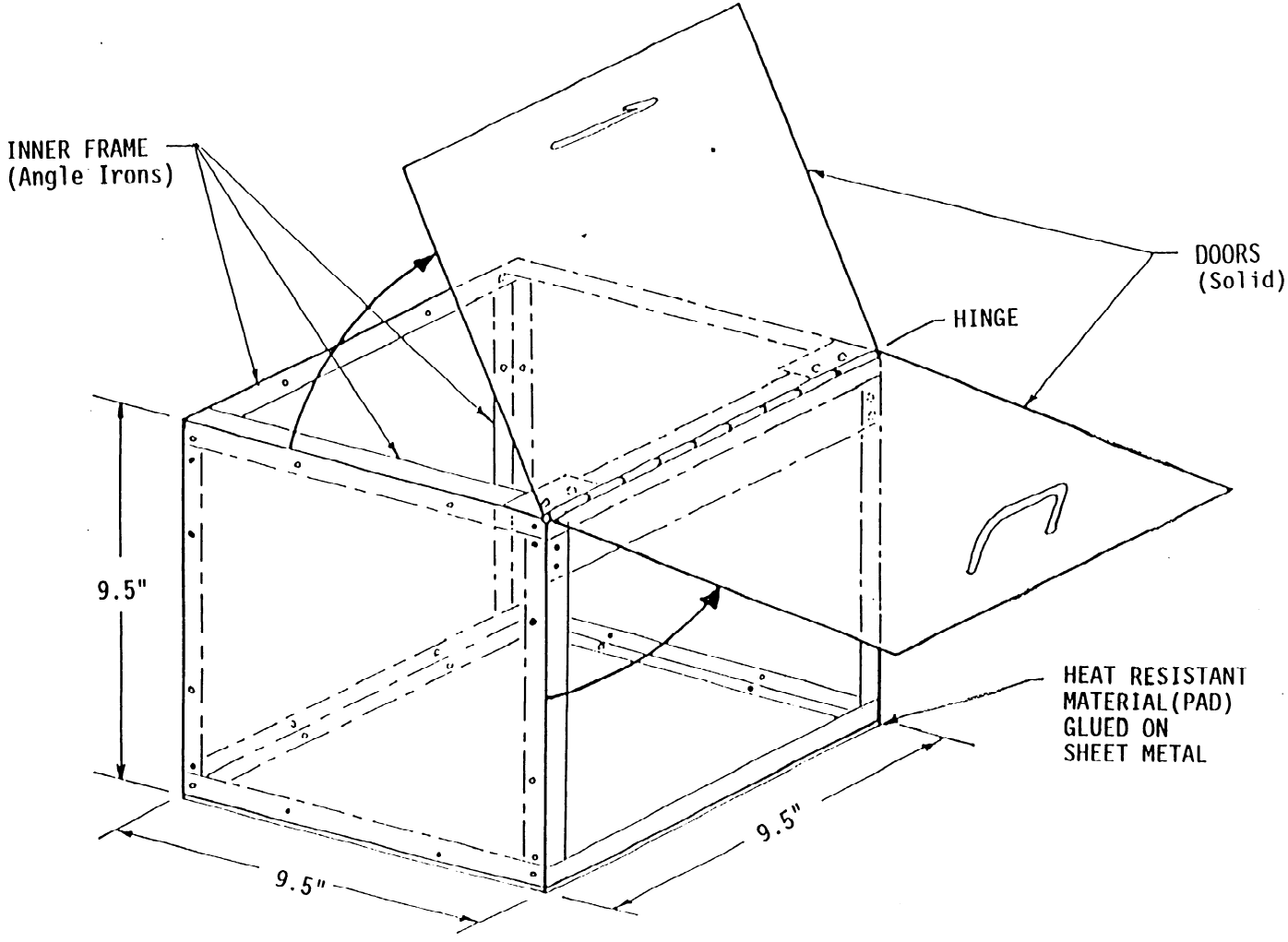

BOX CONSTRUCTED OF SHEET METAL RIVETTED
ON ANGLE IRON FRAME

BURN BOX SMOKE GENERATOR
OUTER BOX
FIGURE 1

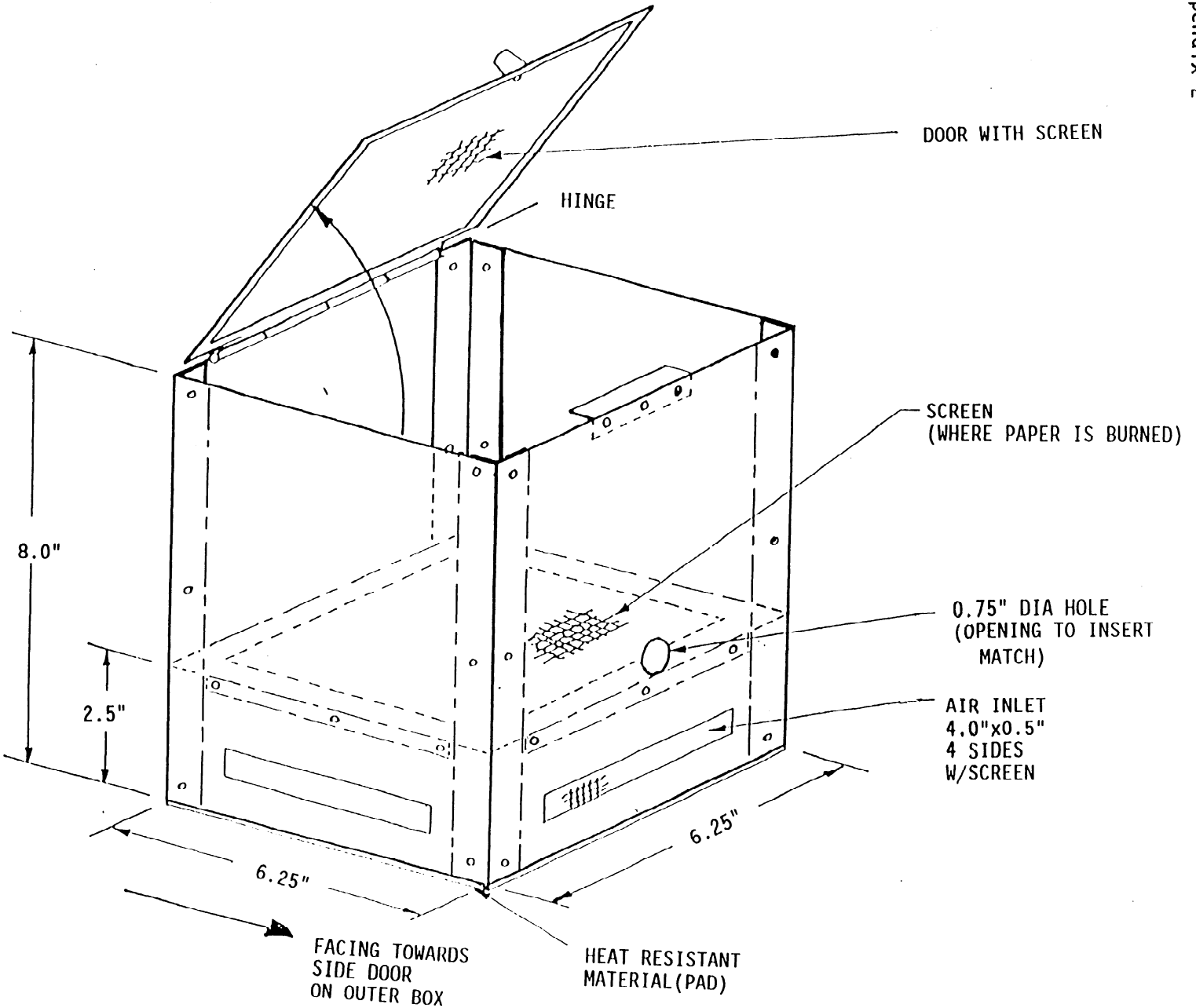

BURN BOX SMOKE GENERATOR
INNER BOX
FIGURE 2

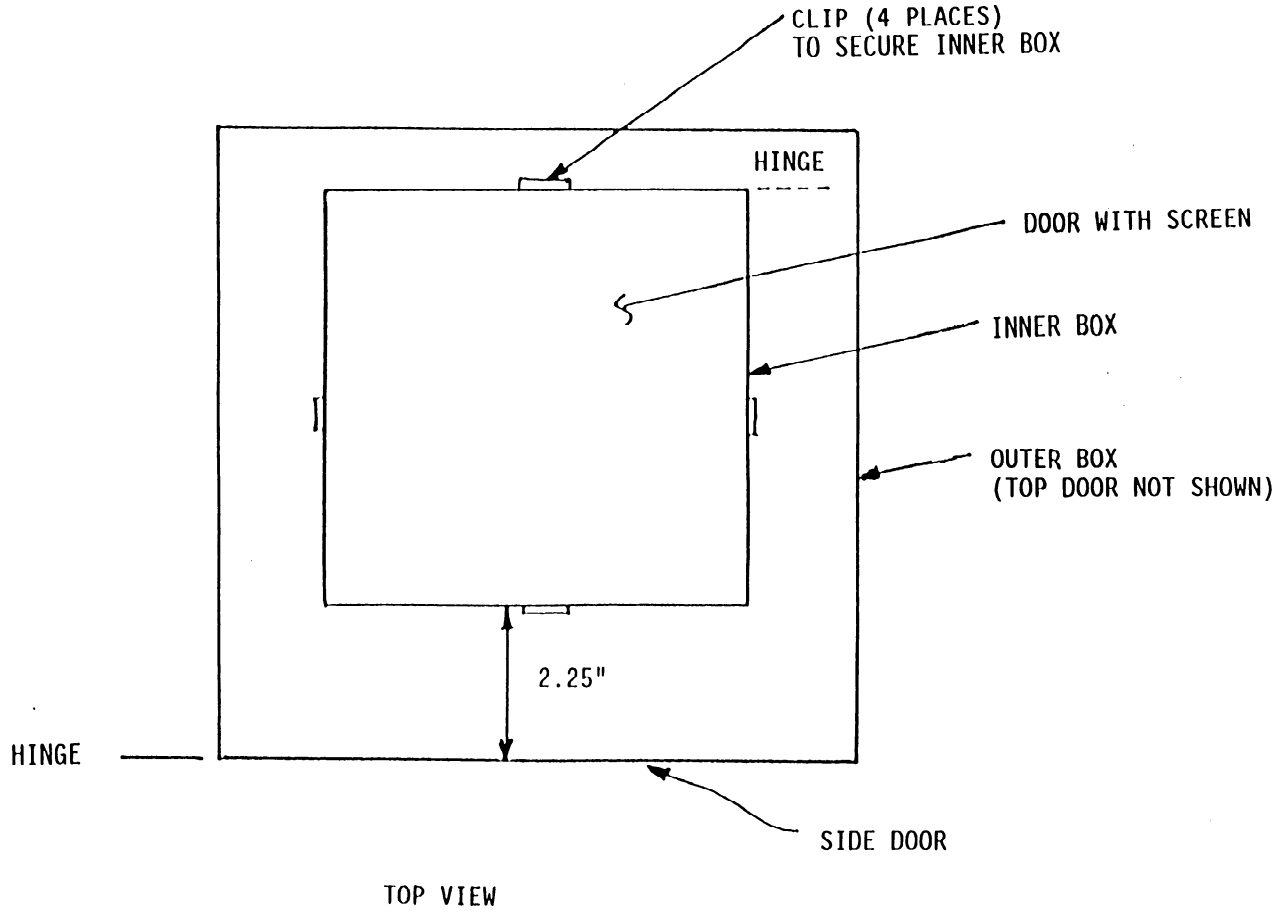

BURN BOX SMOKE GENERATOR
PLAN VIEW
FIGURE 3

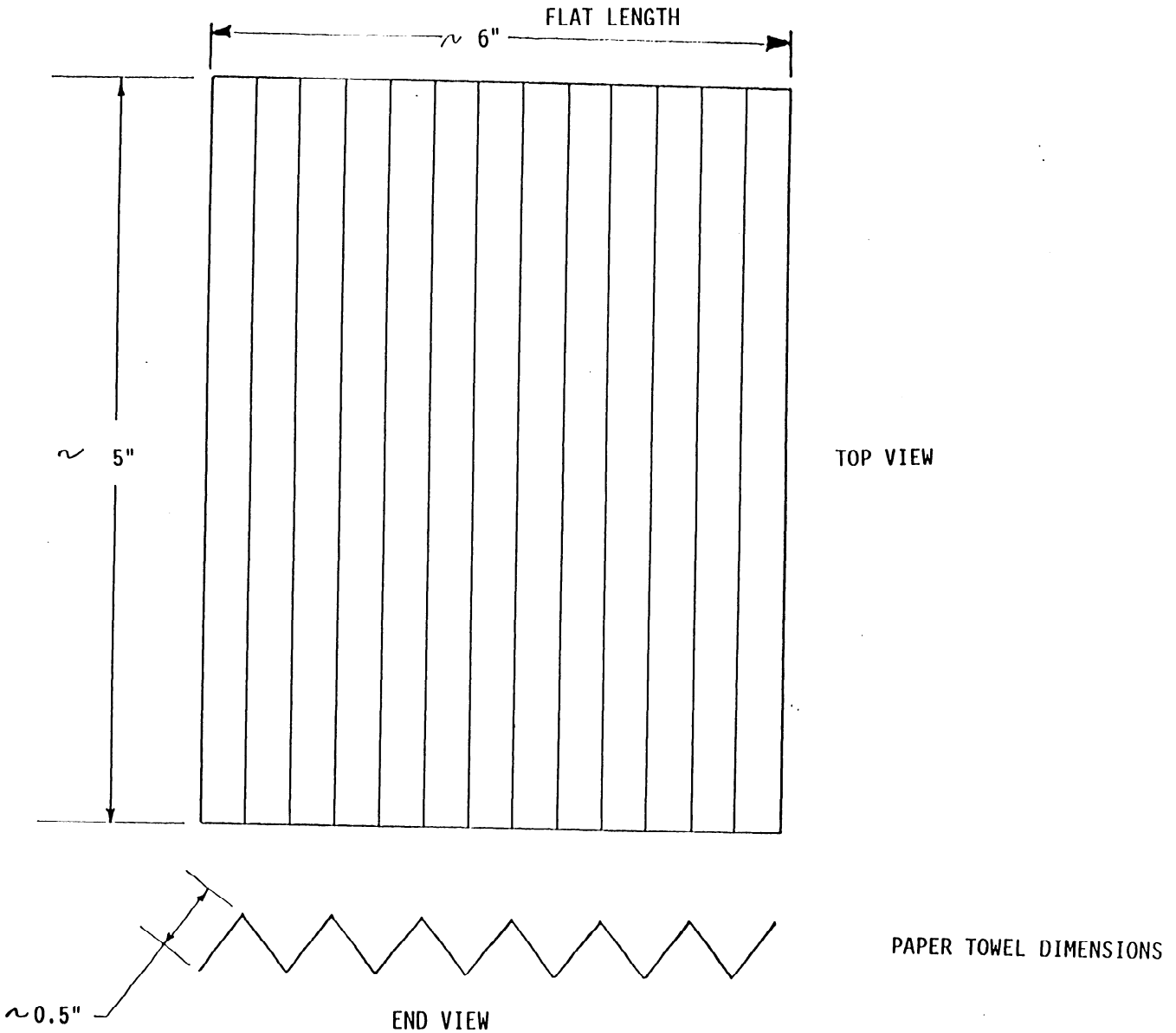

BURN BOX SMOKE GENERATOR
FUEL (PAPER TOWEL)
FIGURE 4

U.S. Department
of Transportation

**Federal Aviation
Administration**

800 Independence Ave., S.W.
Washington, D.C. 20591

**FORWARDING AND RETURN
POSTAGE GUARANTEED**

Official Business
Penalty for Private Use $300

BULK MAIL
POSTAGE & FEES PAID
FEDERAL AVIATION
ADMINISTRATION
PERMIT NO. G-44