Appendix G

Hazardous Materials Group Factual

Excerpts from Sherwood Valve Info

Wilmer, TX
HWY-05-MH-035

SHERWOOD

Technical Specifications for Sherwood Compressed Gas Valves

SHERWOOD

2111 Liberty Drive
Niagara Falls
New York 14304-37444

Telephone: 716-283-1010
Fax: 716-283-5737

Toll Free: 888-50VALVE (508-2583)
Toll Free Fax: 800-416-0678

harsco corporation | Gas & Fluid Control Group

© 2000 Sherwood, Harsco Corporation, Gas and Fluid Control Group

SHERWOOD

1-888-50VALVE (508-2583)

TABLE OF CONTENTS
TECHNICAL SPECIFICATIONS

Cylinder Valve Selection Charts	i
Establishing a Leak Tight Seal	xiii
Pressure Relief Devices for Compressed Gas Cylinders	xv
Pressure Relief Device Charts	xix
"AV" Series Acetylene Valve -Wrench Operated	1
"AVB & AVMC" Series Acetylene Valves	3
"AV5160WB" Series Acetylene Valves for use in "WB" Style Cylinders	5
"BV" Series Hi/Lo Pressure Regulating Valves	7
1210 -1214 Series Chlorine Container Valves	11
"DF" Series Valves with Dual Outlets for Manifolding Applications	13
"JV" Series Industrial and Chrome Plated Cylinder Valves	17
"KVA" Series Post Type Medical Valves	21
"TVPR" Series SHERCheck® Residual Pressure/Back Check Valves	25
"TV" Series Manifold Valves	27
"TV" Series Acetylene Valves	29
"TV" Series Industrial and Chrome Plated Valves	31
"YVA" Series Line Valves	35
"YVB" Series Medical Valves	37

SHERWOOD

1-888-50VALVE (508-2583)

SHERWOOD CYLINDER VALVE SELECTION CHART

The **Sherwood Cylinder Valve Series Abbreviation Chart** on this page is to be used with the **Sherwood Cylinder Valve Selection Chart** beginning on the next page. The **Sherwood Cylinder Valve Selection Chart** is for reference only and lists:

- the most commonly used gases
- the Compressed Gas Association primary outlet to be used with each gas
- the Sherwood valves designated for use with this gas
- the pressure relief device styles that are authorized by the DOT for use with these gases

Please note that the **Sherwood Cylinder Valve Selection Chart** is a partial list extracted from the CGA V-1 and S-1.1 pamphlets. This list can change without notice as the CGA V-1 and S-1.1 pamphlets are amended. Sherwood will issue periodic changes to the catalog. If there is any discrepancy or question between this list and the CGA V-1 and S-1.1 pamphlets, the CGA V-1 and S-1.1 pamphlets take precedence.

IF YOU NEED ASSISTANCE, PLEASE CALL SHERWOOD CUSTOMER SERVICE AT (716) 283-1010.

SHERWOOD CYLINDER VALVE SERIES ABBREVIATION CHART

Abbreviation	Sherwood Valve Series
AV	AV Series Acetylene Valves - Wrench Operated
AVB	"B" Style Acetylene Valves
AVMC	"MC" Style Acetylene Valves
AVWB	Acetylene Valves used in "WB" Style Cylinders
BV	BV Series Hi/Lo Pressure Regulating Valves
1210-1214	Chlorine Container Valves
DF	Cylinder Valves with Dual Outlets for Manifolding Applications
DV	Diaphragm Packless Valves - Brass
DVS3	Diaphragm Packless Valves - Stainless Steel
JV	JV Series O-ring Style Industrial and Chrome Plated Cylinder Valves
KVA	KVA Series Post Type Medical Valve
TV	TV Series Packed Style Acetylene, Industrial, and Chrome Plated Valves
TVPR	TVPR Series SHERCheck® Residual Pressure/ Back Check Valves
YVB	YVB Series Medical Cylinder Valves
PV	Propane Cylinder Valve - Please contact Sherwood Customer Service at (716) 283-1010 for a Propane Product Catalog.

SHERWOOD

1-888-50VALVE (508-2583)

SHERWOOD CYLINDER VALVE SELECTION CHART

SHERWOOD CYLINDER VALVE SELECTION CHART

GAS NAME PSIG (KPA)	FTSC CODE (SEE TABLE) 1.0)	CGA OUTLET	SHERWOOD VALVE SERIES (SEE ABBREVIATION CHART ON PAGE 1) AV	AV B	AV MC	AV WB	BV	CV	DF **	DV	DV S3	JV	KV	TV	TV PR	YV B	PV	PRD*** PER CGA S-1.1 (SEE TABLE 2.0)
Nitric Oxide	4361																	
		660									•							Prohibited
Nitrogen	0160																	
0-3000 (0-20,680) Threaded		580							•	•	•	•		•	•			CG-1,-4,-5
0-3000 (0-20,680) Yoke		960											•					CG-1,-4,-5
Oil Tolerant		621							•	•	•	•		•	•			CG-1,-4,-5
3001-5500 (20,690-37,900)		680							•	•	•	•		•	•			CG-1,-4,-5
5501-7500 (38,000-51,700)		677							•	•	•	•		•	•			CG-1,-4,-5
Nitrogen Dioxide	4301																	
		660									•							Prohibited
Nitrogen Peroxide *See Nitrogen Dioxide*																		
Nitrogen Sesquioxide *See Nitrogen Trioxide*																		
Nitrogen Tetroxide *See Nitrogen Dioxide*																		
Nitrogen Trifluoride	4140																	
		670						•		•	•							CG-3,-4,-5
Nitrogen Trioxide																		N.A.
		660									•							CG-3,-4,-5
Nitrous Oxide (R744a)	4110																	
Threaded		326							•	•	•	•		•				CG-1
Yoke		910											•					CG-1
Octafluorocyclobutane (RC318)	0100																	
			660														•	CG-7
Octafluoropropane (R218)	0100																	
			660							•	•	•		•			•	CG-1,-7
Oxirane *See Ethylene Oxide*																		
Oxygen	4060																	
0-3000 (0-20,680) Threaded			540							•	•	•		•	•	•		CG-1,-4,-5
0-3000 (0-20,680) Yoke			870										•					CG-1,-4,-5
3001-5500 (20,690-37,900)			577							•	•	•		•	•			CG-1,-4,-5
5501-7500 (38,000-51,700)			701							•	•	•		•	•			CG-1,-4,-5
Oxygen Difluoride	4343																	
			679							•	•							Prohibited
Pentaborane	3300																	
			350							•	•							Prohibited
Pentafluoroethane (HFC-125)	0100																	
			660							•	•	•		•			•	CG-1,-7
Perfluorobutane (FC-3-1-10) (R-610)	0100																	
			660					•		•	•	•		•			•	N.R. CG-2,-7
Perfluor-2-butene	0100																	
			660					•		•	•	•		•				N.R. CG-2
Perfluorocyclobutane *See Octafluorocyclobutane*																		
Perfluoroethane *See Hexafluoroethane*																		
Perfluoropropane *See Octafluoropropane*																		
Phosgene	0303																	
		660						•		•	•							Prohibited
Phosphine	3310																	
	350							•		•	•							Prohibited

** DF Valves can be used with all gases, however, the outlet will always be 1/4-27NPT female.

***Pressure Relief Device Assembly.

© 1997 Sherwood, Taylor-Wharton Gas Equipment Division of Harsco Corp. I-CG02C97

SHERWOOD

1-888-50VALVE (508-2583)

SHERWOOD CYLINDER VALVE SELECTION CHART

SHERWOOD CYLINDER VALVE SELECTION CHART

GAS NAME PSIG (KPA)	FTSC CODE (SEE TABLE) 1.0)	CGA OUTLET	SHERWOOD VALVE SERIES (SEE ABBREVIATION CHART ON PAGE 1)															PRD*** PER CGA S-1.1 (SEE TABLE 2.0)
			AV	AV B	AV MC	AV WB	BV	CV	DF **	DV	DV S3	JV	KV	TV	TV PR	YV B	PV	
MEDICAL ② GAS MIXTURES ② ③ FOR PRESSURES UP TO 3000 (20,680)																		
Nitric Oxide Mixtures and Nitrogen Dioxide Mixtures																		
Threaded	625										•							Prohibited
Nitrous Oxide & Oxygen (N2 47.5 to 52.5%)																		
Threaded	280											•		•				CG-1,-4
Yoke	965												•					CG-1,-4
Nitrogen & Oxygen (O2 over 23.5%)																		
Threaded	280											•		•				CG-1,-4
Yoke	890												•					CG-1,-4
Oxidizing Mixtures																		
Threaded	296											•		•				CG-1,-4
Yoke	977												•					CG-1,-4
Xenon & Oxygen (O2 over 20%)																		
Threaded	280											•		•				CG-1,-4
Yoke	890												•					CG-1,-4

** DF Valves can be used with all gases, however, the outlet will always be 1/4-27NPT female.
***Pressure Relief Device Assembly.
• For a definition of the term Medical Gas see paragraph 6 page 11 of the Introduction CGA pamphlet V-1-1994.
• Nominal mixture concentration; normal mixture tolerances are allowable.
• Gas Mixtures labeled as drugs or medical devices and not having another connection assigment.
• For specific gas assigments see the reference connection number in CGA pamphlet V-1-1994

TABLE 2.0 TYPES OF PRESSURE RELIEF DEVICES

TYPE	DESCRIPTION
CG-1	Rupture Disc
CG-2	165°F (73.9°C) Fusible Plug for Cylinder Product not exceeding 500 psig (3450 KPa)
CG-3	212°F (100°C) Fusible Plug for Cylinder Product not exceeding 500 psig (3450 KPa)
CG-4	Rupture Disc with 165°F (73.9°C) Fusible Alloy Backing
CG-5	Rupture Disc with 212°F (100°C) Fusible Alloy Backing
CG-7	Pressure Relief Valve
CG-8	Rupture Disc Followed by (in Series) a Pressure Relief Valve
CG-9	217°F (102.7°C) Fusible Plug for Cylinder Marked Service Pressure not exceeding 6000 psig (41400 KPa)
Prohibited	Prohibited from using a Pressure Relief Device for this gas by 49CFR100-199
N.R.	None Required
N.R. CG-_	None Required, but if a Pressure Relief Device is to be used the CG-_ style is to be selected

PRESSURE RELIEF DEVICES FOR COMPRESSED GAS CYLINDERS

Introduction

Almost all compressed gas containers are fitted with pressure relief devices. A pressure relief device is a pressure- and/or temperature-activated device used to prevent the pressure from rising above a predetermined maximum, and thereby prevent rupture of a normally charged cylinder when subjected to a standard fire test as required by Title 49 of the U.S. Code of Federal Regulations (49 CFR 173.34(d)), or equivalent regulations of Transport Canada.

Pressure Relief and Safety Devices

The Compressed Gas Association, in pamphlet CGA S-1.1, has classified pressure relief devices according to type using the letter designation CG followed by a numeral. Each of these types is described in the following subsections (reference CGA S-1.1).

REF. LATER →

Type CG-1 (Pressure Relief Rupture Disk). A rupture disk (synonymous with the name burst disk within the industry) is a pressure-operated device which affords protection against development of excessive pressure in cylinders. This device is designed to sense excess pressure in a cylinder and will function when the cylinder pressure is of sufficient magnitude to cause the rupture or bursting of the rupture disk element, thereby venting the contents of the cylinder. The rupturing of the rupture disk element results in a nonreclosing orifice.

Rupture disk devices installed on compressed gas cylinders may be either an integral part of the cylinder valve assembly or may be installed on the cylinder as an independent attachment. The materials of construction selected must be compatible with the fluid in the cylinder as well as the cylinder valve materials with which the rupture disk device comes in contact in order to minimize corrosion.

One of the most common types of rupture disk devices consists of (1) a gasket, (2) a rupture disk, and (3) a rupture disk holder. These components are only supplied as factory-assembled devices designed to be replaced as a unit.

The gasket is the part which provides the proper seal to prevent leakage of the cylinder contents past the rupture disk assembly and may be constructed of metallic or nonmetallic materials.

The rupture disk is the operating part of the pressure relief device and, when installed in a proper rupture disk holder, is designed to burst at a predetermined pressure to permit discharge of the cylinder contents. Such disks are usually made of metallic materials and may be of flat, preformed, reinforced, grooved, or scored construction. Nonmetallic materials are also used for specific applications.

The rupture disk holder is the part of the pressure relief device which contains the opening, against which the rupture disk mates. The rupture disk holder usually also contains the discharge porting or passages, beyond the operating parts of the device, through which fluid must pass to reach the atmosphere. In many cases, the discharge holder is provided with radial vent holes through which the fluid in the cylinder vents to the atmosphere. This radial discharge design provides an anti-recoil feature which minimizes rocketing of compressed gas cylinders during discharge of the contents through the pressure relief device. Other types of discharge ports may also be provided in rupture disk holders to suit specific application requirements.

Most rupture disk devices are designed with holders having either sharp-edged or radius-edged orifices to which the rupture disk mates. The sharp-edged orifice produces a shear-type actuation mode whereby the disk ruptures in shear, producing a characteristic leaf-type configuration after functioning.

The radius-edged orifice produces a tension-type actuation made whereby the disc stretches over the radius-edge. This thins the center of the disc until it can no longer hold the pressure. This type of rupture produces a characteristic rose petal configuration after functioning.

Since the actuation modes of each type of holder described above are completely different, it is important that only original manufacturer's assemblies be used in the replacement of rupture disk devices.

⚠WARNING No attempt should be made to repair fusible plug devices. They are not repairable and attempts to repair will destroy the integrity of the fusible alloy causing leakage of gases that may lead to fire, personal injury or death.

LIMITATIONS:
Since the fusible plug is a thermally operated device, it is designed to function only when the fusible metal melts out. Hence, it does not protect against over pressure from improper charging practices.

Sufficient heat to melt the fusible alloy is necessary for proper functioning of this type of device. Therefore, the location of such devices is an important consideration.

Industry practice limits the application of these style fusible plugs to cylinders with 500 psig (3447 kPa) service pressure or less to minimize the possibility of cold flow or extrusion of the fusible alloy.

A fusible plug device is a nonreclosing device and, when it functions, it releases the entire contents of the cylinder.

Type CG-4 and CG-5 (Combination Rupture Disk/Fusible Plug). A combination rupture disk/ fusible plug pressure relief device requires both excessive pressure and excessive temperature to cause it to operate. Sufficient heat is required to first melt out the fusible metal, after which the device will afford the same protection as the CG-1 rupture disk device.

The CG-4 combination device has fusible alloy with a nominal melt temperature of 165°F (73.9°C). The CG- 5 combination device has fusible alloy with a nominal melt temperature of 212°F (100°C).

In this type of device, the rupture disk portion (CG-1) is directly exposed to the internal cylinder pressure, and so it is directly upstream of the fusible metal. In general, the same components that make up the CG-1 device are used and the vent portion or downstream side of the rupture disk holder is suitably filled with fusible metal. The rupture disk is thus reinforced against rupturing by the fusible alloy, and the fusible alloy is reinforced against extrusion by the rupture disk.

NOTE: The same precautions noted for CG-1 devices should be adhered to for CG-4 and CG-5 devices. See "Warning's" on pages 1 and 2.

LIMITATIONS:
CG-4 and CG-5 combination devices function only in the presence of both excessive heat and excessive pressure, and sufficient heat must be present first to melt the fusible metal.

Therefore, this device does not offer protection against over pressure from improper charging practices.

Type CG-7 (Pressure Relief Valves). A pressure relief valve is a spring-loaded pressure-operated device designed to relieve excessive cylinder pressure, reclose, and reseal to prevent further release of product from the cylinder after excessive pressure is removed and valve resealing pressure has been achieved.

The primary advantage of using the pressure relief valve is that functioning of this type of device may not release all of the contents of the cylinder, but is designed to reseal after resealing pressure has been achieved. This characteristic, in fire conditions, will minimize feeding the fire in the case of flammable or combustible cylinder contents.

LIMITATIONS:
Pressure relief valves are designed to maintain the pressure in the cylinder at a limit as determined by the spring force. Therefore, such devices do not protect the cylinder against possible rupture when continued application of external heat or direct flame impingement weakens the cylinder wall to the point where its rupture pressure is less than the operating pressure of the relief valve.

If you require any assistance in selecting a Pressure Relief or Safety device for a specific application, please call Sherwood Customer Service at (716) 283-1010 with the following information:

- The part number of the Valve Assembly being repaired, if applicable.
- Type of gas service in which cylinder will be used.
- Service or test pressure of the cylinder.

SHERWOOD

1-888-50VALVE(508-2583)

PRESSURE RELIEF DEVICE SELECTION CHARTS

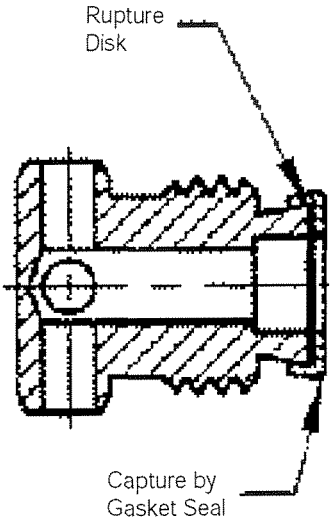

PRESSURE RELIEF DEVICE SELECTION CHART FOR POST TYPE MEDICAL VALVES

XX SUFFIX	CYLINDER SERVICE PRESSURE	DISC RUPTURE RANGE PSIG AT 160° F		RUPTURE DISC STAMPING	PRESSURE RELIEF DEVICE REPLACEMENT PART NUMBER	
		MINIMUM	MAXIMUM		CG-1 WITH NO FUSE METAL	CG-4 WITH FUSE METAL
-28	1800	2700	3000	3000	9-4000-60-28	6513MF-28
-32	2015	3025	3360	3360	9-4000-60-32	6513MF-32
-48	3000	4500	5000	5000	9-4000-60-48	6513MF-48

© 1997 Sherwood, Taylor Wharton Gas Equipment Division of Harsco Corp.

T-CGO6D97

IMPORTANT!

This specification is intended for use with **"KVA" Series Valve Assemblies.**

MAKE SURE YOU ARE USING THE CORRECT SPECIFICATION!

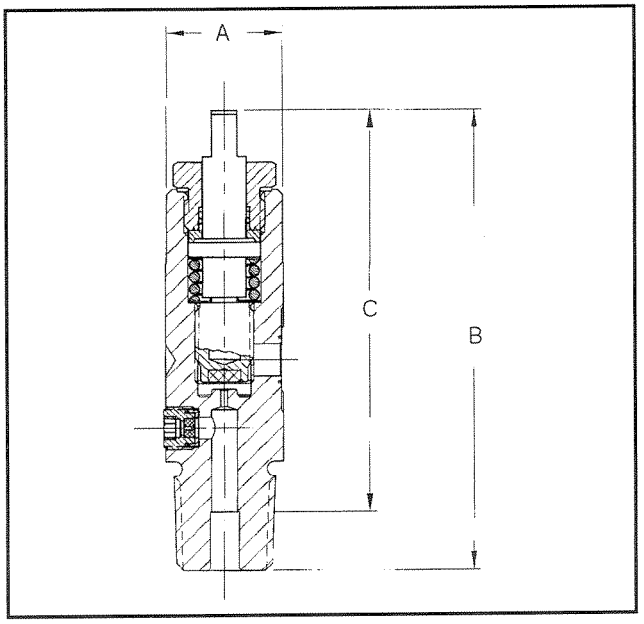

"KVA" WRENCH OPERATED VALVES WITH TAPERED THREAD INLET
(See Repair Section for detail parts breakdown)

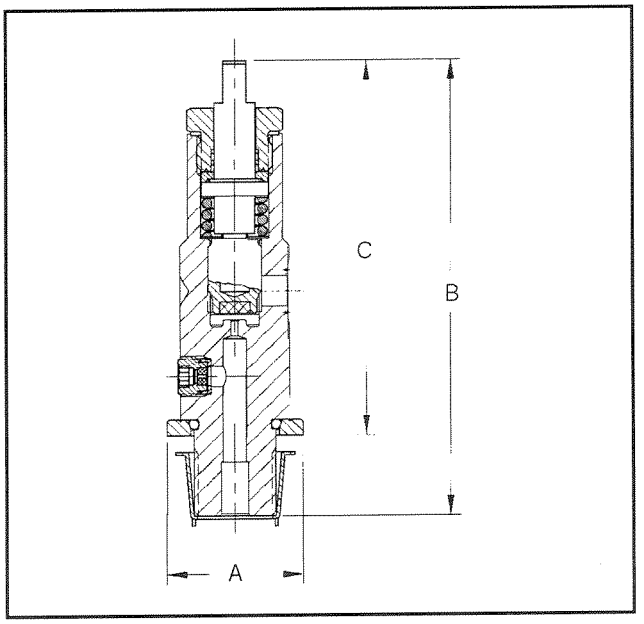

"KVA" WRENCH OPERATED VALVES WITH STRAIGHT THREAD INLET
(See Repair Section for detail parts breakdown)

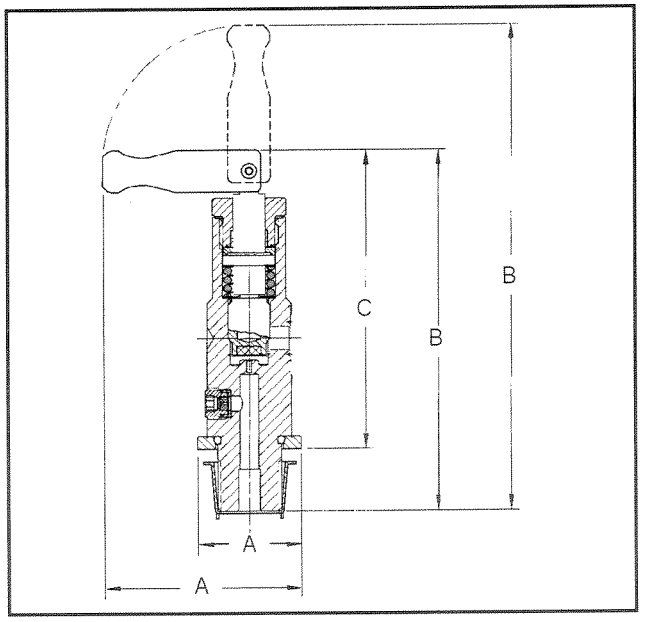

"KVA" TOGGLE OPERATED VALVES WITH STRAIGHT THREAD INLET
(See Repair Section for detail parts breakdown)

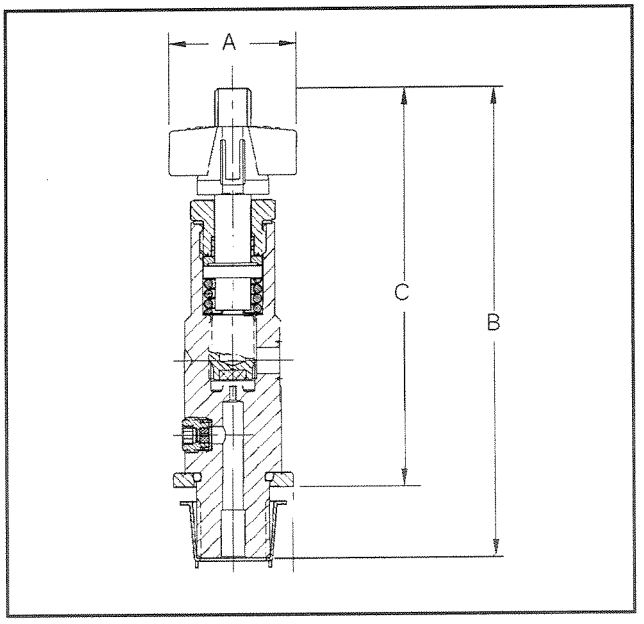

"KVA" KNOB OPERATED VALVES WITH STRAIGHT THREAD INLET
(See Repair Section for detail parts breakdown)

© 2000 Sherwood, Harsco Corporation, Gas and Fluid Control Group

T-CG02AA97

SHERWOOD

1-888-50VALVE (508-2583)

"KVA" SERIES POST TYPE MEDICAL VALVES TECHNICAL SPECIFICATIONS

REFERENCE DATA:

Pressure

Proof: 12,000 PSIG Minimum

Test: Cylinder Service Pressure or 3000 PSIG (whichever is less)

Temperature - Storage

Minimum: -65 F

Maximum: 155 F

Temperature - Operating

Minimum: -50 F

Maximum: 120 F

Cycle Life: 5000 Cycles

CONFORMS TO ALL REQUIREMENTS OF:

MIL-DTL-2E DOD
Specification for Gas Cylinder Valves

CGA V-9
Standard for Gas Cylinder Valves

CGA S - 1.1
Standard for Pressure Relief Devices

CGA V-1
Compressed Gas Cylinder Valves
Outlet and Inlet Connections

INLET O-RING FOR STRAIGHT THREADED "KVA" SERIES VALVES

Size	Material	Part Number
750-16	Viton®	G210J
750-16	Teflon®	G210T

MATERIALS OF CONSTRUCTION FOR "KVA" SERIES VALVES

Part Description	Material of Construction
Back-up Rings	Teflon®
Body	Chrome Plated Free Machining Brass UNS Alloy #36000
Bonnet	Chrome Plated Free Machining Brass UNS Alloy #36000
Flange O-ring	Viton®
Gasket	Copper
Lower Plug	Leaded Naval Brass, UNS Alloy #48500
Lower Plug Seat	Nylon: Zytel® 201
Packing	Teflon®
Pressure Relief Device Assembly	
Body	Free Machining Brass UNS Alloy #36000 (212° F or 165° F for backed devices)
Disc	Nickel Alloy 201
Retainer Gasket	Nylon: Zytel 101
Flange Ring	Free Machining Brass UNS Alloy #36000
Spring	Passivated Stainless Steel, Type 302
Stem	Chrome Plated Free Machining Brass UNS Alloy #36000
Stem O-ring	Viton®
Stem Washers	Passivated Stainless Steel, Type 302
Knob (if Applicable)	Lexan®
Pin (if Applicable)	303 Stainless Steel; Passivated
Toggle (if Applicable)	Chrome Plated Free Machining Brass UNS Alloy #36000

Sherwood and the "SS" symbol are trademarks of Sherwood, Harsco Corporation, Gas and Fluid Control Group
All other names are trademarks of their respective owners.
Printed in the USA

© 2000 Sherwood, Harsco Corporation, Gas and Fluid Control Group

T-CG02FF97

TORQUE VALUES FOR "KVA" SERIES VALVES		
	Description	**Torque**
WRENCH TAPERED	Operating Torque @ 0 PSIG Inlet Pressure Operating Torque @ 2000 PSIG Inlet Pressure	3 in. lbs. 8 - 12 in. lbs.
WRENCH FLANGED	Operating Torque @ 0 PSIG Inlet Pressure Operating Torque @ 2000 PSIG Inlet Pressure	1 - 2 in. lbs. 8 - 10 in. lbs.
TOGGLE	Operating Torque @ 0 PSIG Inlet Pressure Operating Torque @ 2000 PSIG Inlet Pressure	1 - 2 in. lbs. 8 - 10 in. lbs.
KNOB FLANGED	Operating Torque @ 0 PSIG Inlet Pressure Operating Torque @ 2000 PSIG Inlet Pressure	1 - 2 in. lbs. 8 - 10 in. lbs.
Bonnet Installation Torque		25 to 30 ft. lbs.
Pressure Relief Device Installation Torque		50 to 65 in. lbs.

FLOW AND DIMENSIONS FOR "KVA" SERIES VALVES: CGA OUTLET NUMBERS 870 - 973				
FLOW DATA		Seat Orifice Diameter (inches)		0.062
		Flow Constant: Cv - Full Open		0.102
		Flow CFM @ 2000 PSIG Inlet Pressure		100
APPROXIMATE DIMENSIONS (INCHES)		Wrench Operated, Tapered Thread Inlet	(A)	0.875 x 1.00
		Wrench Operated, Straight Thread Inlet	(A)	1.24
		Toggle Operated, Straight Thread Inlet	(A)	1.24 - 2.36
		Knob Operated, Straight Thread Inlet	(A)	1.32
APPROXIMATE OVERALL HEIGHT (INCHES)	WRENCH OPERATED	For 1/2" NGT Inlets	(B)	3.90
		For 3/4"-16 UNF Inlets	(B)	4.20
	TOGGLE OPERATED	For 1/2" NGT Inlets	(B)	N/A
		For 3/4"-16 UNF Inlets	(B)	4.3 - 5.8
	KNOB OPERATED	For 1/2" NGT Inlets	(B)	N/A
		For 3/4"-16 UNF Inlets	(B)	4.90
APPROXIMATE HEIGHT OF VALVE INSTALLED IN CYLINDER* (INCHES)	WRENCH OPERATED	For 1/2" NGT Inlets	(C)	3.40
		For 3/4"-16 UNF Inlets	(C)	3.40
	TOGGLE OPERATED	For 1/2" NGT Inlets	(C)	N/A
		For 3/4"-16 UNF Inlets	(C)	3.6 - 5.1
	KNOB OPERATED	For 1/2" NGT Inlets	(C)	N/A
		For 3/4"-16 UNF Inlets	(C)	4.20

* Valves with tapered threaded inlets are calculated to 7 3/4 threads engagement. Valves with straight threaded inlets are measured from top of the cylinder to the top of the Valve.

Sherwood and the "SS" symbol are trademarks of Sherwood, Harsco Corporation, Gas and Fluid Control Group
All other names are trademarks of their respective owners.
Printed in the USA

© 1997 Sherwood, Harsco Corporation, Gas and fluid Control Group