ATTACHMENT #3

CONSTRUCTION PLANS

(5 Pages)

FED. RD. DIV. NO.	FEDERAL AID PR	
6	NH 9	
STATE	STATE DIST. NO.	
TEXAS	18	
CONT.	SECT.	
0092	02	0
/d185113/45/		

STATE OF TEXAS
DEPARTMENT OF TRANSPORTATION

DESIGN SPEED = 65 MPH

FINAL PLANS

PLANS OF PROPOSED
STATE HIGHWAY IMPROVEMENT

FEDERAL AID PROJECT
NH 97 (25)

IH 45
DALLAS COUNTY

FROM: MALLOY BRIDGE ROAD
TO: IH 20

NET LENGTH OF PROJECT=42,094.90 FT. = 7.972 MILE
- * ROADWAY = 41,464.90 FT. = 7.853 MILE
- * BRIDGE = 630 FT. = 0.119 MILE

EQUATION: 1655+09.92 BK.=10064+15.02 FW.
NO EXCEPTIONS
RAILROAD CROSSING SOUTHERN PACIFIC RAILROAD

CONSTRUCTION OF THE WIDENING OF A FREEWAY FACILITY
CONSISTING OF GRADING, STRUCTURES, DRAINAGE,
PAVEMENT MARKING AND SIGNING

* CONTROL 0092-02-090
ROADWAY = 37,264.90 FT. = 7.058 MILE
BRIDGE = 630 FT. = 0.119 MILE

* CONTROL 0092-14-044
ROADWAY = 4,200 FT. = 0.795 MILE
BRIDGE = 0 FT. = 0 MILE

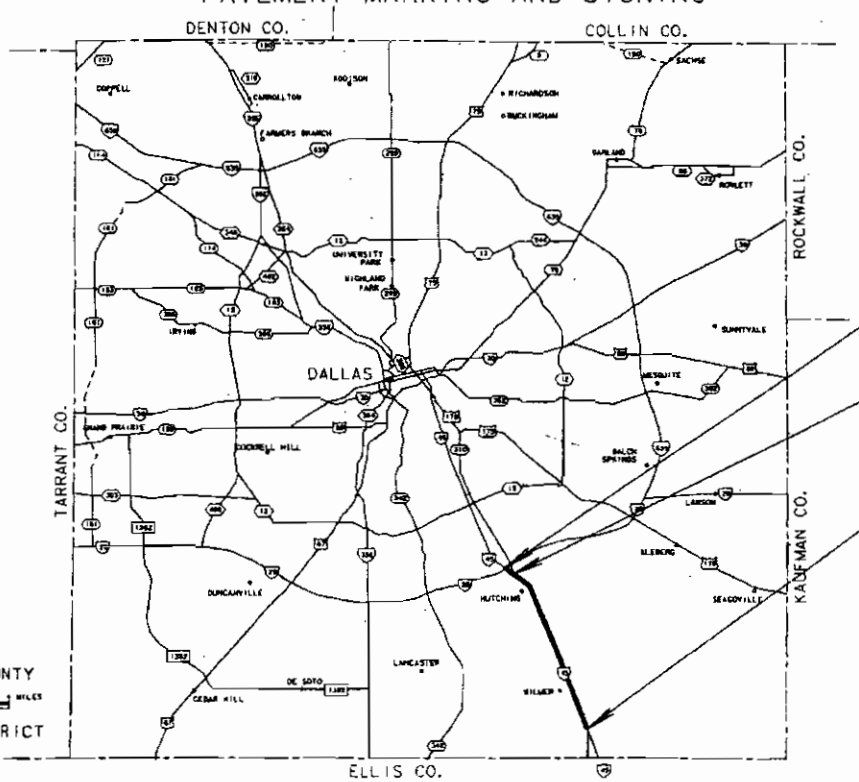

END PROJECT
CONTROL 0092-14-044
STA. 10147+00
REF. MKR. 276+0.379
END CONTROL 0092-02-090
BEGIN CONTROL 0092-14-044
STA. 10105+00
REF. MKR. 275+0.696

BEGIN PROJECT
CONTROL 0092-02-090
STA. 1317+00
REF. MKR. 268+0.389

TEXAS DEPARTMENT OF TRANSPORTATION

SUBMITTED FOR LETTING 8-27-97
PROJECT ENGINEER

RECOMMENDED FOR LETTING 8-27-97

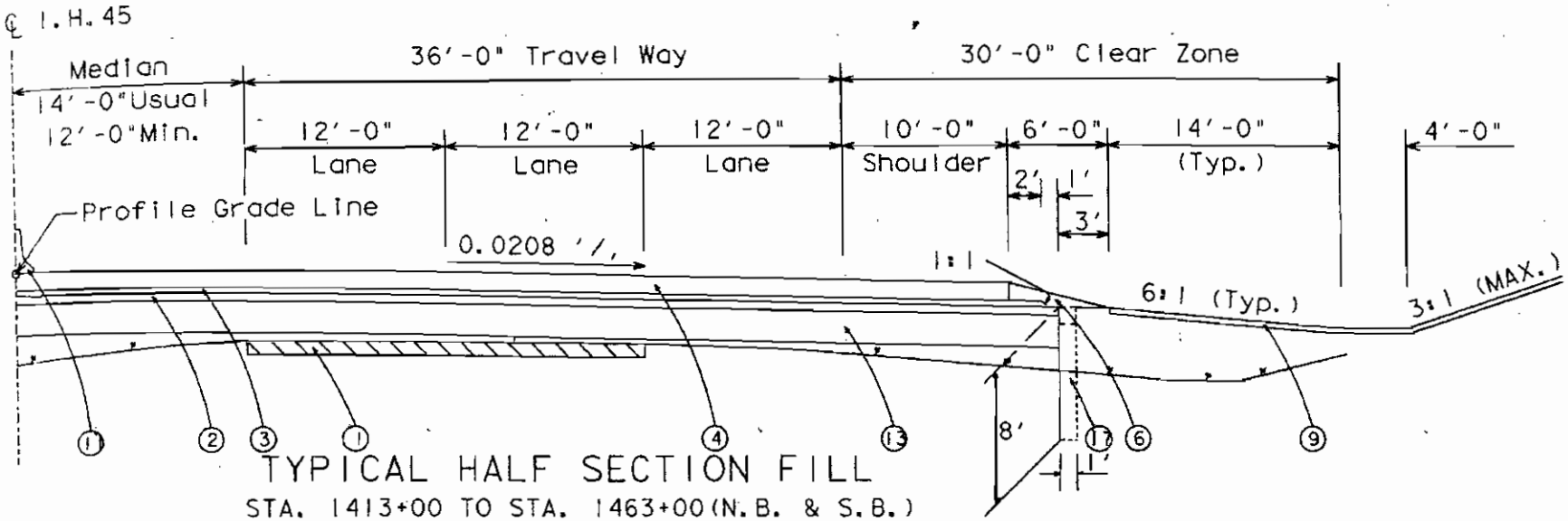

TYPICAL HALF SECTION FILL

STA. 1413+00 TO STA. 1463+00 (N.B. & S.B.)
STA. 1491+00 (S.B.) TO STA. 1515+00 (S.B.)
STA. 1525+00 (N.B.) TO STA. 1543+00 (N.B.)
STA. 1525+00 (S.B.) TO STA. 1548+00 (S.B.)

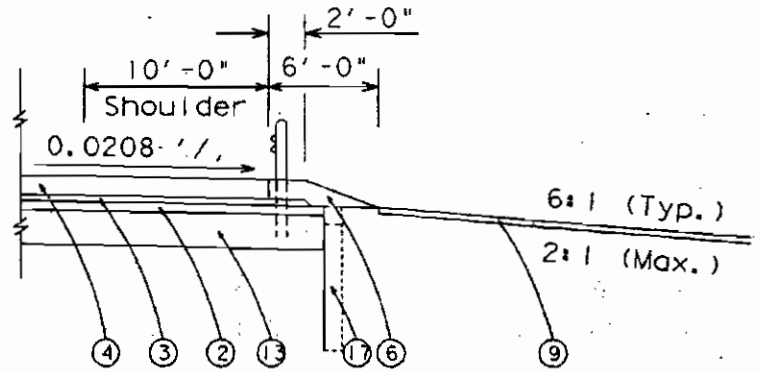

TYPICAL SECTION WITH M.B.G.

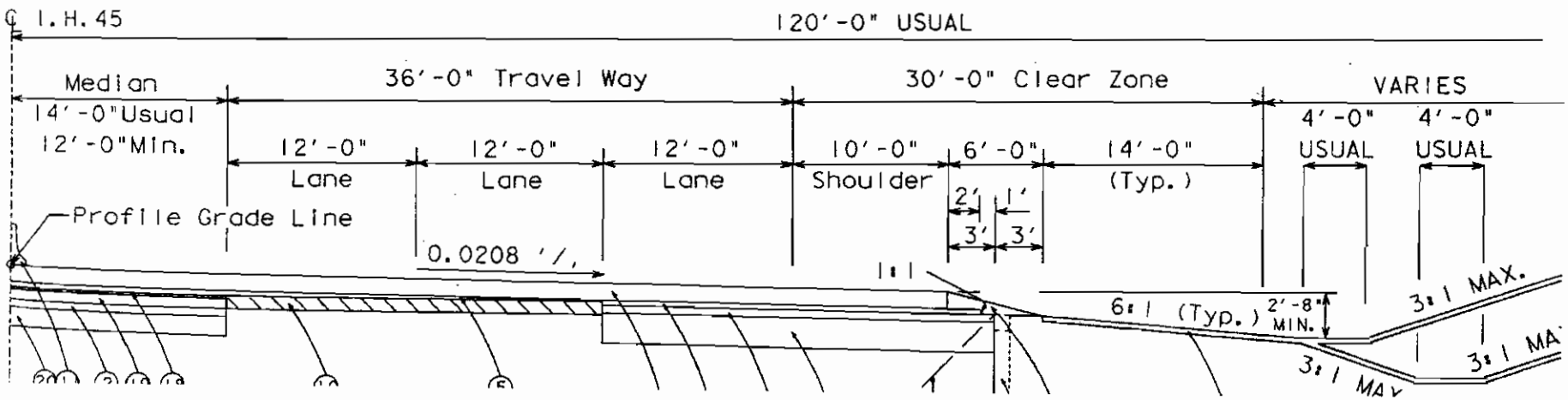

LEGEND

1. EXISTING CONCRETE PAVEMENT (TO BE REMOVED)
2. 6" LIME TREATED SUBGRADE (4% BY WT.) (DC)
3. 4" ASPHALTIC CONCRETE PAVEMENT (TYPE A)
4. 13" CONCRETE PAVEMENT (CPCR)
5. VARIABLE DEPTH ASPH. CONC. PAV. (1" MIN.) (TYPE B)
6. ASPHALTIC CONC. PAV. (VARIABLE DEPTH) (TYPE C)
7A. 2" ASPHALTIC CONCRETE PAVEMENT (TYPE C)
7B. 2" ASPHALTIC CONCRETE PAVEMENT (TYPE B)
8. 9" FLEXIBLE BASE
9. 4" TOPSOIL
10. EXISTING CONCRETE PAVEMENT (CRACK AND SEAT)
11. CONCRETE TRAFFIC BARRIER
12. 8" CONCRETE PAVEMENT (CPCD)
13. 23" SELECT MATERIAL (DENS. CONT.) (TYPE C)
14. VARIABLE DEPTH ASPHALT CONCRETE PAVEMENT (TYPE C)
15. 8" LIME TREATED SUBGRADE (7% BY WT.) (DC)
16. PRIME COAT (ASPH. MATL. (MS-2))
17. VERTICAL MOISTURE BARRIER
18. 2" ASPHALTIC CONCRETE PAVEMENT (TYPE C)
19. 8" ASPHALTIC CONCRETE PAVEMENT (TYPE A)
20. 15" SELECT MATERIAL (DENS. CONT.) (TYPE C)

MAX.)

(4)

:1 (Typ.)

:1 (Max.)

I M.B.G.F.

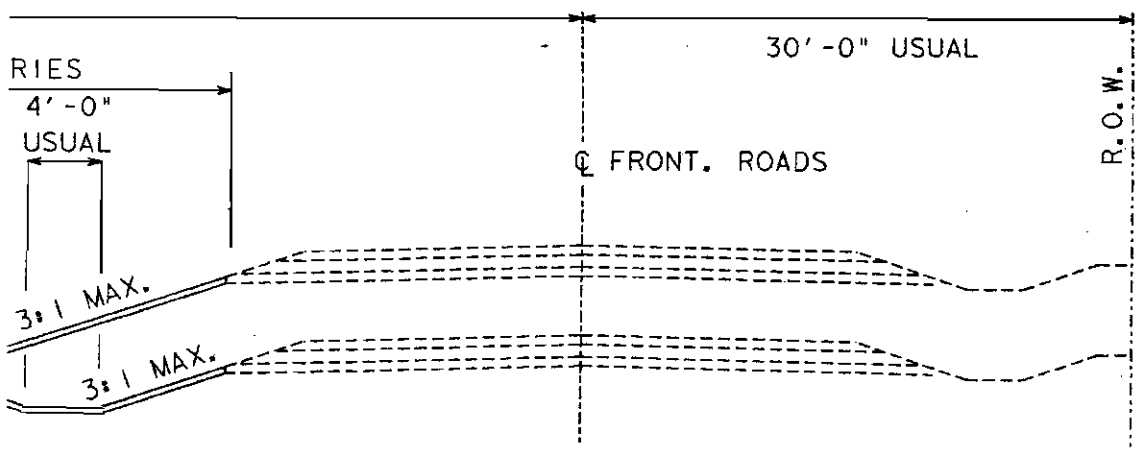

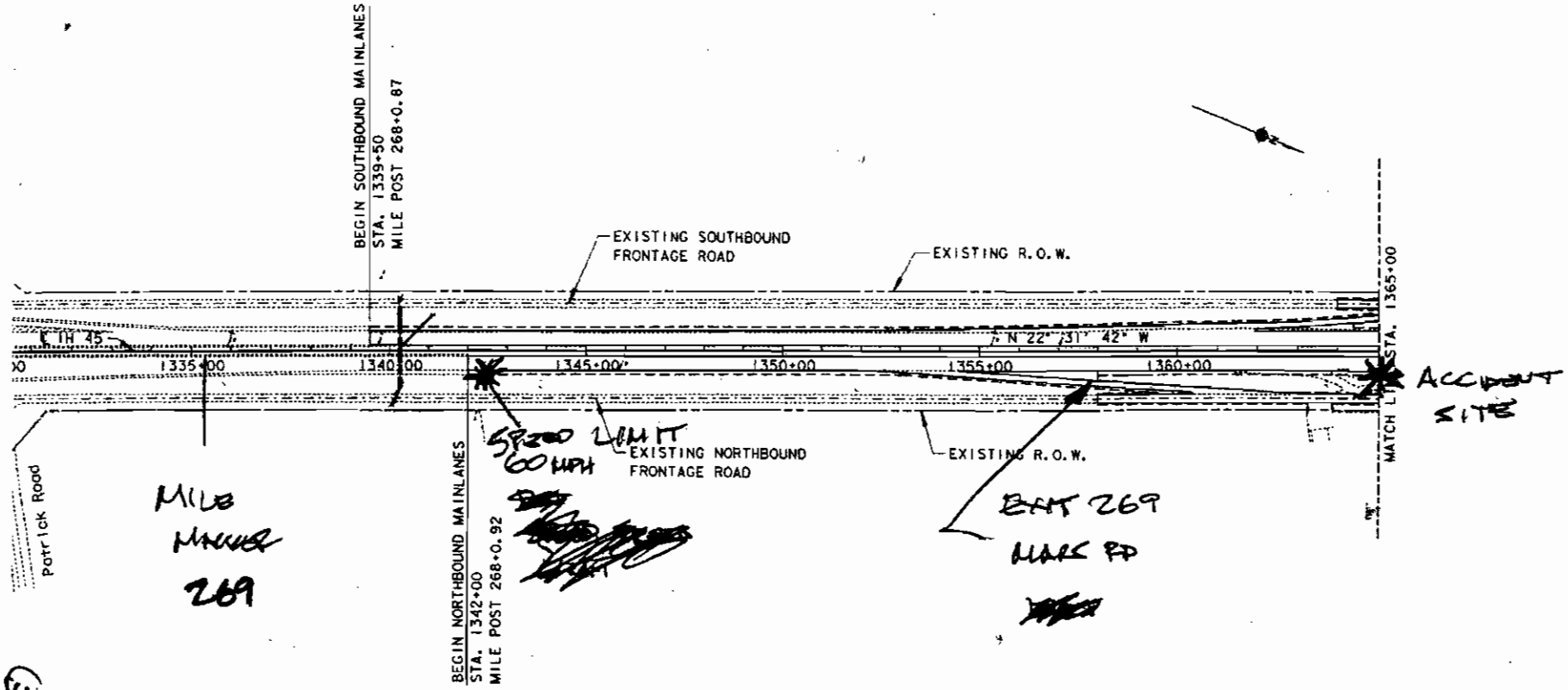
BEGIN SOUTHBOUND MAINLANES
STA. 1339+50
MILE POST 268+0.87
EXISTING SOUTHBOUND FRONTAGE ROAD
EXISTING R.O.W.
℄ IH 45
N 22° 31' 42" W
1335+00
1340+00
1345+00
1350+00
1355+00
1360+00
STA. 1365+00
ACCIDENT SITE
58200 LIMIT
60 MPH
EXISTING NORTHBOUND FRONTAGE ROAD
EXISTING R.O.W.
Patrick Road
MILE MARKER 269
EXIT 269
MARK RD
BEGIN NORTHBOUND MAINLANES
STA. 1342+00
MILE POST 268+0.92

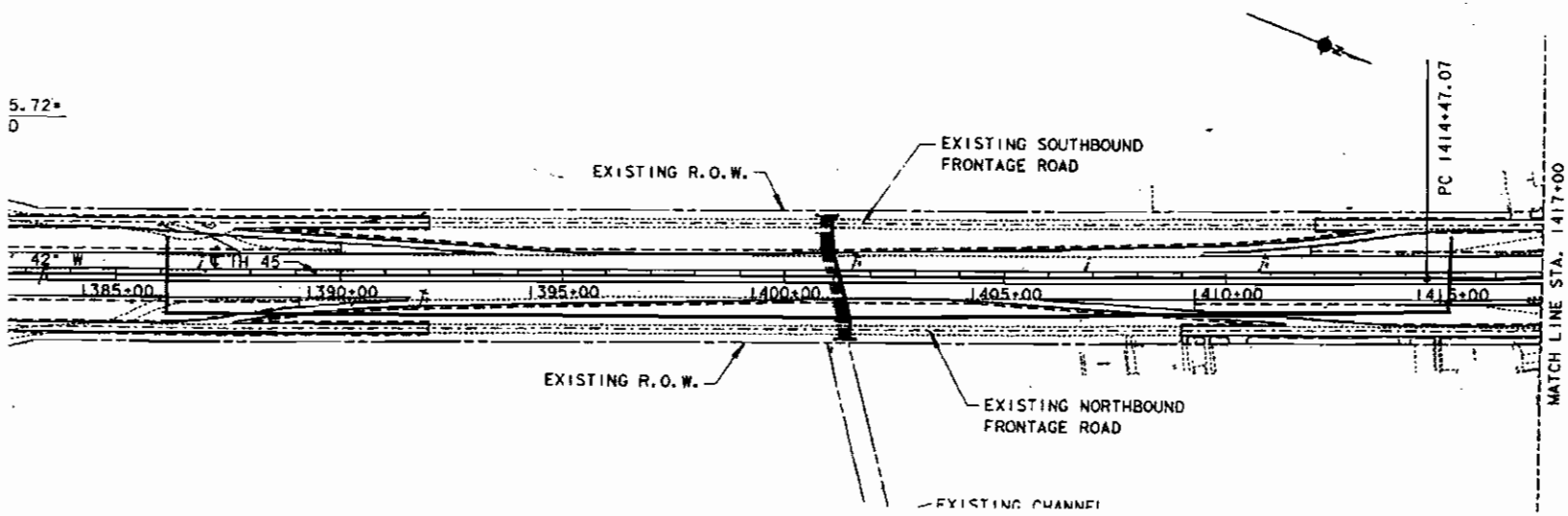
EXISTING R.O.W.
EXISTING SOUTHBOUND FRONTAGE ROAD
PC 1414+47.07
42° W
℄ IH 45
1385+00
1390+00
1395+00
1400+00
1405+00
1410+00
1415+00
MATCH LINE STA. 1417+00
EXISTING R.O.W.
EXISTING NORTHBOUND FRONTAGE ROAD
EXISTING CHANNEL