HWY-05-M-H035
Wilmer, TX

ATTACHMENT #6

Disc Brakes - MCI Maintenance Manual (102E Series, 1997)

(21 pages)

SECTION 4C

DISC BRAKES

CONTENTS OF THIS SECTION

SUBJECT	PAGE
General Description	4C-1
Components	4C-1
Operation	4C-3
Maintenance	4C-5

GENERAL DESCRIPTION

E series coaches have air-actuated disc brake assemblies (Figure 1) on all three axles. The caliper is detailed in Figures 2 and 3. All fasteners are metric except for the air chamber mounting nuts, clevis jam nut, clevis pin and air inlet ports. The brake pads are changed without removing the caliper. The rotor-to-hub fasteners are Imperial thread.

The basic operation of the caliper is simple, but it is important that the features of the clearance/force sensing automatic adjuster are clearly understood. It is essential that the correct service procedures be observed to ensure that the caliper gives satisfactory service throughout its working life.

The brake assemblies are mounted at the axle ends. The brake sizes (diameter and pad area) are identical for all axles. The calipers are right- and left-handed, and are otherwise identical, except for the mounting brackets. These brake assemblies have all-metal construction, and non-asbestos linings.

COMPONENTS

The Lucas air disc brake assembly contains several major components. All of these major components will be discussed, and some other related parts such as the hubs will also be addressed.

LINING ASSEMBLIES

The linings are made of FERODO NFE 4901 GG. The brake lining assemblies are the components most likely to require servicing. Two bonded lining assemblies are required for each brake caliper.

The two identical brake lining assemblies are located on the inner and outer rotor surfaces. The lining assemblies are supported in the caliper by pins, and are guided by the caliper structure.

TORQUE PLATE

The steel torque plate assembly holds the caliper carrier in position at all times, and is the only brake component rigidly attached to the axle. The torque plate provides mounting holes for carrier and axle attaching bolts.

CARRIER

The carrier is a heavy casting that straddles the rotor. It is mounted rigidly to the axle via the torque plate. The carrier locates the caliper via the caliper slide pins, which are fully enclosed.

The carrier also provides the abutment surfaces for the brake lining assembly, which transfers the braking load directly to the axle, rather than through the caliper slide pins. The slide pins guide only the squeezing action of the caliper.

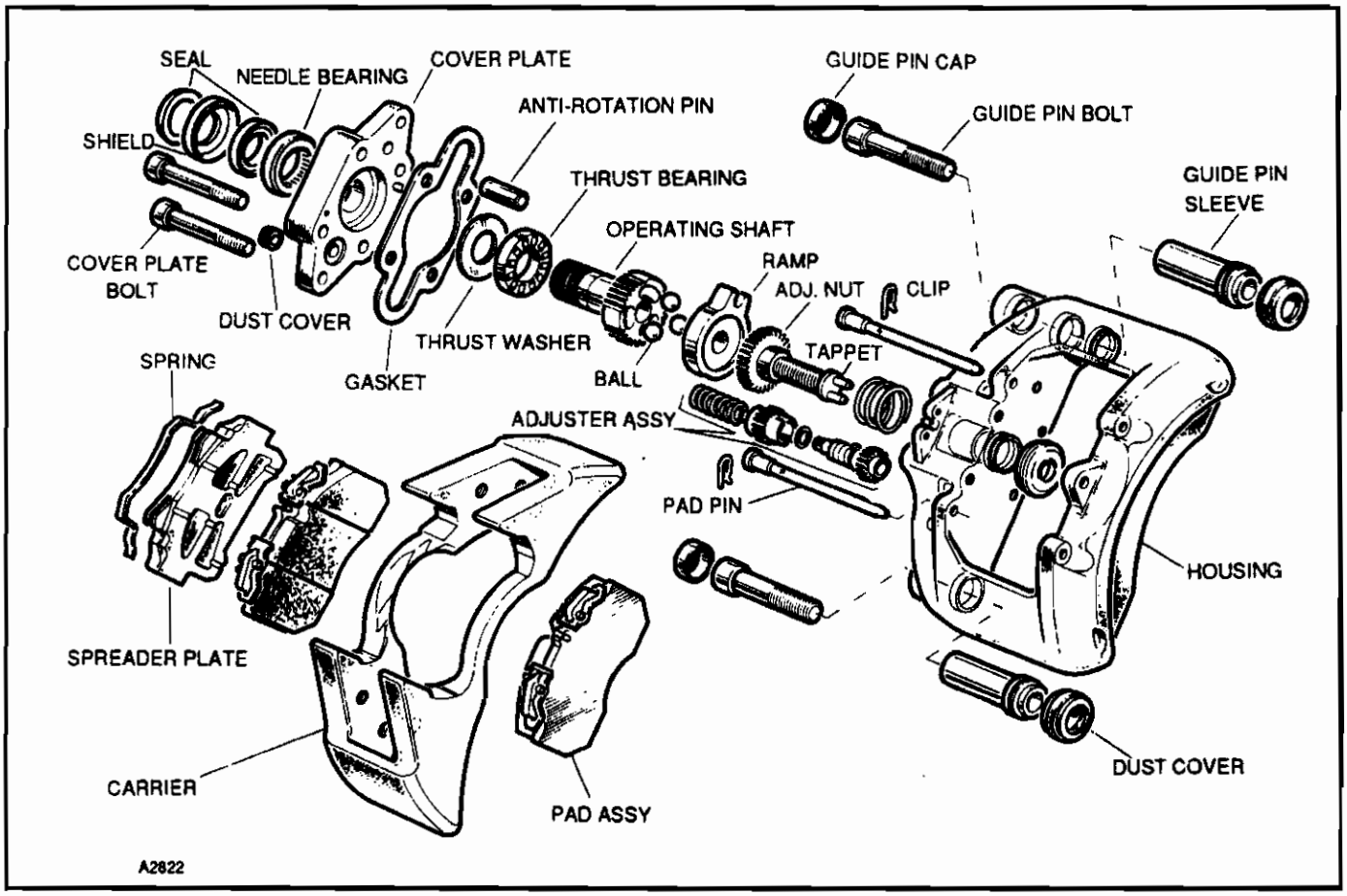

Figure 1. Air Disc Brake Components

CALIPER

The disc brake caliper houses the internal actuating components and the caliper mechanism. The caliper maintains correct brake shoe contact with the rotor. The caliper rides on two slide pin assemblies bolted to the rotor which allow for self-aligning the shoes to the rotor during actuation. The bracket is mounted to the caliper.

HUB AND ROTOR ASSEMBLY

The disc brake rotor is bolted to a machined flange on the hub. The vented rotors are designed to allow the brake shoe linings to ride against the inner and outer surfaces while being actuated. All rotors are a nominal 17.25 inches (438 mm) in diameter.

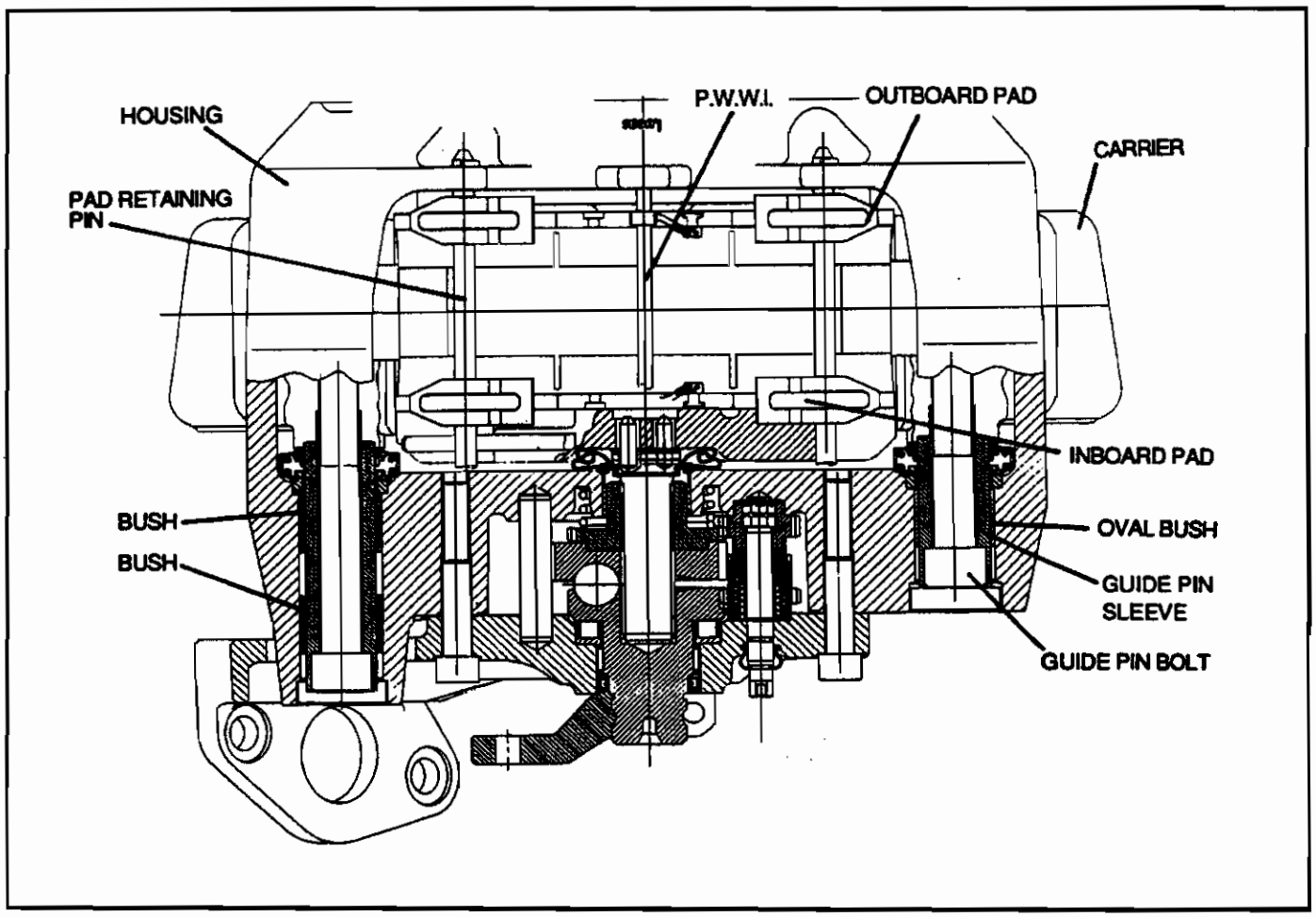

Figure 2.

OPERATION

The air chamber is attached to an air chamber bracket (not shown) which is attached to the caliper housing and connected by a lever to the caliper operating shaft. The carrier is secured to the vehicle and straddles the rotor. The caliper housing assembly slides on two fully-sealed guide pins bolted to the carrier (Figure 2) and the brake pads are supported on the carrier and retained by the pad retaining pins. The brake forces generated by the pads are transmitted directly to the carrier instead of through the caliper housing assembly. As the pads wear, adjustment takes place automatically by an integral clearance/force sensing automatic adjusting mechanism.

NOTE: The clearance/force sensing automatic adjustment maintains a desired small lining-to-disc clearance with light and heavy brake applications. This prevents over- or under-adjustment with different vehicle duty cycles.

Brake Application (No adjustment required)

The actuating mechanism is mechanically driven and incorporates an operating shaft ("cam"), three hardened balls, a ramp and tappet arrangement with a fully integrated clearance/force sensing automatic adjuster mechanism. The adjuster mechanism (Figure 3) is to the side of the operating shaft/ramp assembly and consists of a multi plate friction clutch and wrap spring clutch arranged in series.

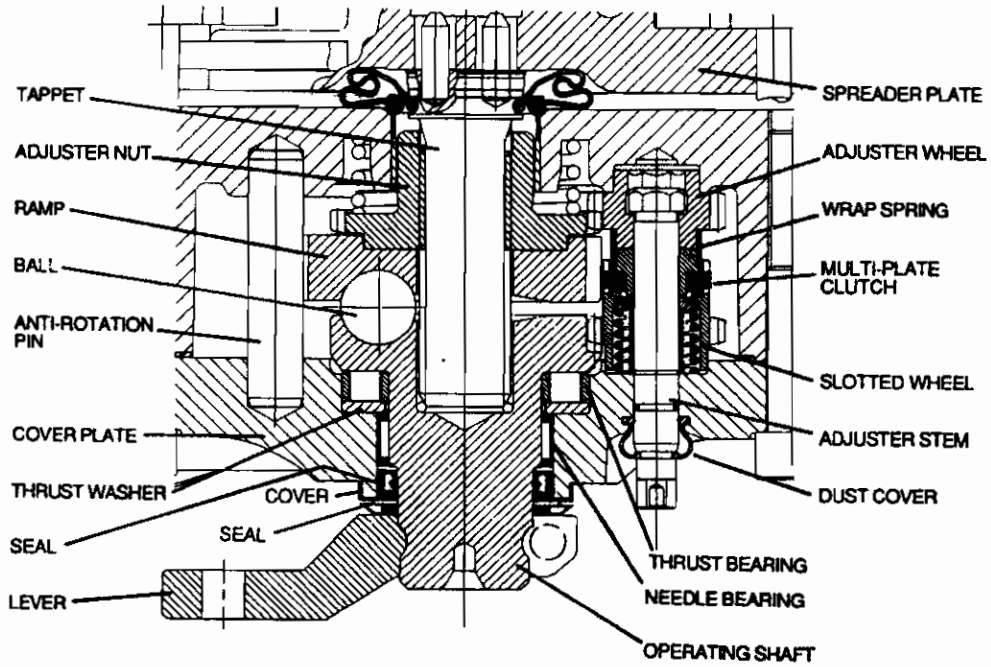

Figure 3.

The multi-plate clutch is loaded by a spring and is designed to slip at a controlled torque in either direction; the wrap spring clutch, however, will lock in one direction while it is free to slip in the opposite direction.

Applying the footbrake to the air chamber applies a load to the actuating lever, thus rotating the operating shaft. As the operating shaft rotates the hardened balls, which sit in helical pockets in both operating shaft and ramp, begin to rise up the helix of the pockets and generate expansion between operating shaft and ramp. The ramp, which is prevented from turning by the anti rotation pin, is therefore pushed away from the operating shaft in a linear direction.

The linear expansion or "clamp force" as it is more commonly known, is transmitted by the adjuster nut threads to the tappet. The tappet in turn transmits the load to the spreader plate which distributes the load evenly across the brake pad, forcing the inner brake pad against the rotor. A reaction force, transmitted through the thrust bearing, thrust washer, cover plate and cover plate bolts, presses the outer pad against the rotor.

As the operating shaft rotates it also turns the automatic adjuster slotted wheel due to the meshing of the outer gear forms on both components. The internal wrap spring locks and acts as a solid link. The clearance between the slotted wheel and multi-plate clutch is taken up. The free movement represents the pad-to-rotor running clearance in the "brakes off" condition. The multi-plate friction clutch tries to transmit the torque from the slotted wheel to the adjuster wheel and thus tappet adjuster nut.

When the pads contact the rotor, any further rotation of the operating shaft will increase the clamp load and therefore the torque level between the tappet and adjuster nut to a level which is greater than the controlled torque of the adjuster assembly friction clutch. The friction clutch slips, thus preventing any adjustment of the brake.

When the brake is released the main return spring, with the air chamber return spring, brings the operating mechanism to the "brake off" position.

Brake Application (Adjustment required)

The actuator operates in the same manner as described above and the adjuster slotted wheel takes

up the free play between itself and the tangs on the clutch plates (Figure 3).

Because the clearance between pad and rotor is greater than the pre-set running clearance, no load is generated to cause the friction clutch to slip. As a result the clutch becomes a solid link rotating the adjuster wheel, which in turn rotates the tappet adjuster nut, extending the length of the tappet screw to reduce the pad-to-rotor clearance.

Once the pads contact the rotor, any further rotation of the operating shaft will increase the clamp load between pad and rotor and cause the friction clutch to slip. The adjuster then stops operating, preventing over adjustment. When the brake is released, the clamp load on the pads is removed. The operating shaft rotating in the off direction rotates the slotted wheel through the free play of the slot until the friction clutch plate tangs contact the side of the slot. Further rotation of the operating shaft in the off direction rotates the slotted wheel and friction clutch assembly; however, no movement is transferred to the adjuster nut due to the wrap spring clutch slipping. The tappet therefore remains in its adjusted position with the correct running clearance maintained.

Manual Adjustment

The brake adjuster assembly is provided with a manual override (Figure 4) which allows the brake to be de adjusted and adjusted manually when installing new pads. To manually adjust or de adjust the brake, place a 10 mm socket wrench on the adjuster stem and depress the stem until it engages in the adjuster wheel. While still holding it depressed, rotate the adjuster stem in the appropriate direction with the wrench.

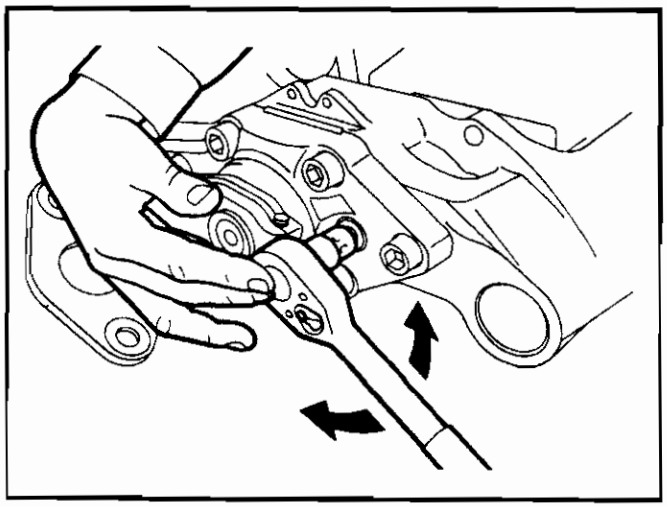

Figure 4.

NOTE: The direction of rotation depends on whether adjusting or de-adjusting the brake. Turning the adjuster stem against the direction of lever travel will adjust the brake. Turning the adjuster stem in the direction of lever travel will de-adjust the brake.

MAINTENANCE

Although there is no routine maintenance of the caliper required it is important the following inspections are carried out at the periods specified.

NOTE: Some procedures require the use of special tools. Failure to use these tools when required may cause personal injury or component damage.

WARNING

The composition of non-asbestos brake linings may contain glass, mineral wool, aramid, ceramic or carbon fibers. Long-term exposure to these types of fibers may cause pneumoconioses, fibrosis and/or cancer. Use caution to avoid the dust from the non-asbestos brake linings when working on them.

The guidelines listed below should be followed to minimize exposure to non-asbestos brake lining dust and particles.

1. Whenever possible, work on brakes in a separate area away from other operations.

2. Always wear a respirator approved by NIOSH or MSHA during all brake service procedures. Wear the respirator from the removal of the wheels through assembly.

3. NEVER use compressed air or dry brushing to clean brake parts or assemblies. OSHA recommends using cylinders that enclose the brake. These cylinders have vacuums with high-efficiency (HEPA) filters and workmen's arm sleeves. If such equipment is not available, carefully clean parts and assemblies in the open air.

4. Clean brake parts and assemblies in the open air. During disassembly, carefully place all parts on the floor to avoid getting dust into the air. Use an industrial vacuum cleaner with a HEPA filter system to clean dust from brake drums, backing plates and other brake parts. After using the vacuum, remove any remaining dust with a rag soaked in water and wrung nearly dry.

5. If it is necessary to grind or machine brake linings, take additional precautions because contact with fiber dust is higher during these operations. In addition to wearing an approved respirator, do such work in an area with exhaust ventilation.

6. When cleaning the work area, NEVER use compressed air or dry sweeping. Use an industrial vacuum cleaner with a HEPA filter and rags soaked in water and wrung nearly dry. Dispose of used rags with care to avoid getting dust into the air. Use an approved respirator while emptying vacuum cleaners and handling used rags.

7. After working on the brake system, workers should wash their hands before eating or drinking. Work clothes should not be worn home. Work clothes should be vacuumed after use and then laundered separately, without shaking, to prevent getting fiber dust into the air.

WARNING

Wear safe eye protection at all times while performing brake maintenance to prevent serious personal injury

Every 3 months or 12,500 Miles (20,000 Km):

1. Make a visual assessment of the pad life remaining. Replace brake pads when the lining thickness has worn to 1 /8" (3mm).

2. Check the brake lever travel. It should conform to the dimensions specified by the vehicle and chamber manufacturers (See Table 1).

Table 1

CHAMBER	Axle	Max. Readjust Stroke: with 100 psi applied	
		Inches	Millimeters
MGM 16/20 Long Stroke (2.50 inch)	Tag	2.0	51.0
MGM T24 Long Stroke (3.00 inch) 1428018	Front	2.5	63.5
MGM 24/30 Long Stroke (3.00 inch)	Drive	2.5	63.5

3. Visually inspect the general condition of the brake assembly for damage or corrosion. If there is any doubt in the suitability for further service, replace or repair the assembly in accordance with the vehicle manufacturer's recommendations.

Every 12 months:

1. Remove the wheels and brake pads as described in the pad replacement section.

NOTE: Always replace brake pads in axle sets.

NOTE: If the pads are to be reused it is advisable to remove the pads and pad wear indicator assembly together, thus not disturbing the wear indicator plug inserts in the pad backplates.

2. Inspect the guide pin and tappet dust covers. Ensure they are undamaged and securely located. If any of the dust covers are damaged or detached, dismantle the relevant area of the brake and examine the components for corrosion or damage. Repair or replace these parts as needed.

3. Check that the caliper slides easily on the guide pins secured to the carrier. If the caliper assembly does not slide easily on the guide pins, remove it from the carrier as described In the caliper replacement section. Examine the guide pins and caliper guide pin bores for signs of corrosion or wear. If there is any doubt in their suitability for further service, replace these parts with new components.

4. Check the brake rotor for signs of heavy grooving, cracking or corrosion. Check that the thickness dimension is in accordance with the rotor manufacturer's recommendations, which is cast into the rotor, or 1.61" (41mm), whichever is larger. Replace as necessary.

BRAKE PAD REPLACEMENT

Removing Brake Pads

1. Chock the wheels before any service work is started.

2. Apply air pressure to release the park brake, then cage the spring brake chambers (where appropriate).

3. Jack up the axle and install jack stands.

4. Remove the wheels and exhaust all air from the system.

5. Remove any dirt from the caliper assembly with a wire brush, avoiding damage to the rubber dust covers.

WARNING

Never blow dust from the brake/disc area. Whenever possible remove dry brake dust with a vacuum brush, or wipe the areas with a damp cloth. Never try to accelerate drying time by using an air line.

6. Remove the pad retaining pin clips and carefully tap out the pad retaining pins with a hammer and suitable drift (Figure 5).

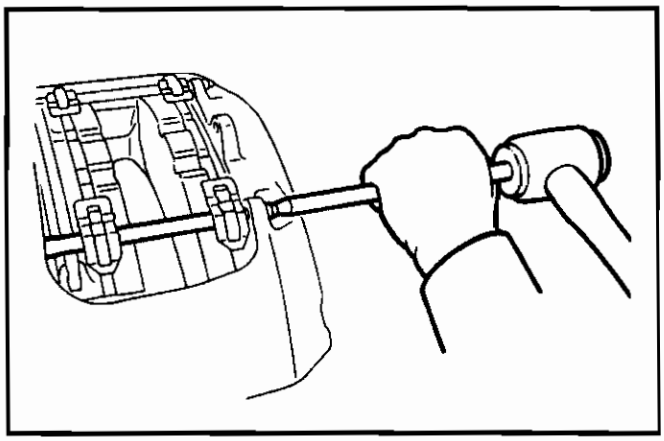

Figure 5.

NOTE: The spreader spring is held in tension on the spreader plate by the pad retaining pins. Hold the spring in position while tapping out the pins to prevent it springing from the brake.

It may be necessary to de-adjust the brake initially to remove the worn brake pads. Using a 10 mm socket on the adjuster stem, depress the stem to engage the adjuster wheel. With the stem depressed, rotate the wrench in the direction of lever travel (brake application stroke) (Figure 4).

CAUTION

Never exceed a maximum torque of 11 lb. ft. (15Nm) in either direction and NEVER use power tools, air or electric, to de-adjust or adjust the brake.

NOTE: During de-adjustment it is necessary to keep the spreader plate located on the tappet head, by hand pressure if necessary. If the tappet pins slip out of engagement with the spreader plate, no further de-adjustment will occur. Always de-adjust or adjust the brake carefully by hand with a suitable wrench

7. De-adjust the brake until it is possible to remove the outboard pad. With the worn outboard pad removed continue to de-adjust the brake until, with the housing assembly pulled across, there is a sufficient opening to install the new outboard pad.

NOTE: Do not install the new outboard pad at this point.

8. Remove the worn inboard pad and spreader plate (Figure 6).

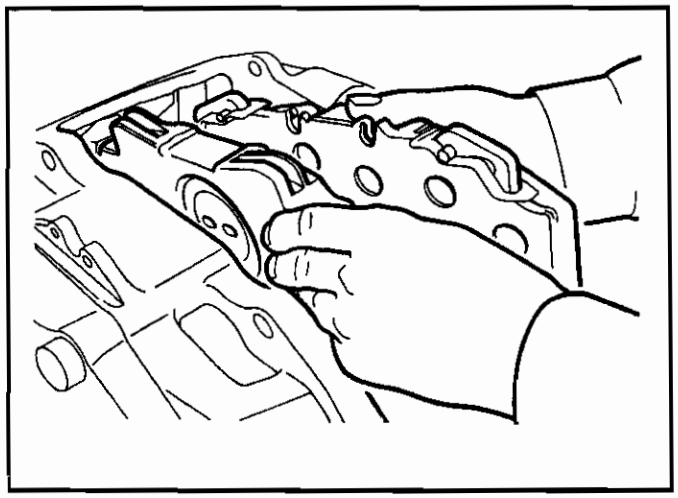

Figure 6.

Cleaning and Inspection

1. With the brake pads removed, check the integrity of the guide pin and tappet dust covers. They should be secure and free from any signs of damage. Check that the caliper housing assembly slides freely on the guide pins.

WARNING

Take care not to trap fingers while checking the sliding action of the brake.

2. Examine the spreader plate for signs of damage or wear.

3. Check the brake rotor for signs of heavy grooving, cracking or corrosion.

4. Check that the thickness dimension meets the rotor manufacturer's recommendations, (which is cast into the rotor) or 1.61″ (41mm), whichever is larger. If drivers have registered complaints of "brake pulsation," the most likely cause is variation in rotor thickness; in this case the rotors will have to be machined or replaced. If there is any doubt in the serviceability of any component, repair or replace it as needed.

5. While wearing suitable eye protection, remove all traces of scale, dirt etc., from the pad opening, abutment faces and around the edge of the rotor, particularly that near the braking surface. A scraper or old screwdriver, supported on the caliper body while the rotor is rotated, will remove most of the corrosion. Finish the job off, if necessary, with emery cloth.

6. Remove all traces of scale, dirt etc. from the pad/spreader plate opening and abutment faces. Contamination here may restrict the movement of the pads and spreader plate and therefore prevent sufficient brake de-adjustment.

Installing New Brake Pads

1. Reinstall the spreader plate and ensure the two pins on the tappet head locate correctly into the spreader plate (Figure 7).

NOTE: Later versions may have one pin and one bolt instead of two pins.

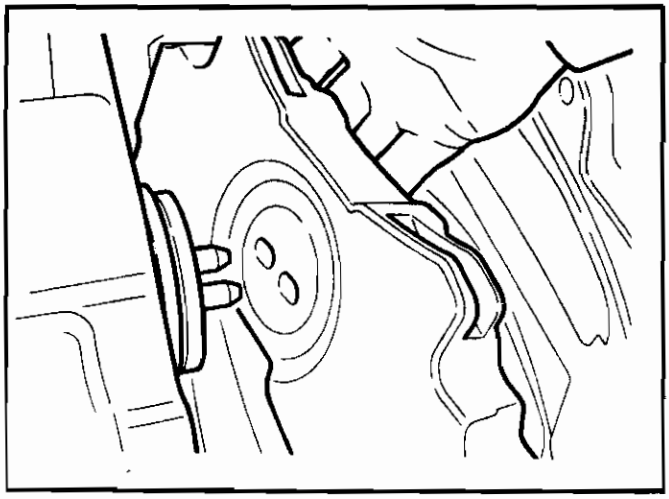

Figure 7.

2. Pull the housing across and install the new outboard pad first. Push the housing back towards the rotor until the new pad contacts the rotor face.

WARNING

Take care not to trap fingers while checking the sliding action of the brake.

CAUTION

Do not exceed the 11 lb. in. (15Nm) maximum torque on the adjuster shaft.

3. Continue pushing with light pressure. Depress the adjuster stem and continue to de-adjust the brake until the opening between the spreader plate and the rotor face is large enough to accept the new pad. This dimension should be approximately 1 1/8″ (28.5 to 29mm.)

4. Install the spreader spring on the spreader plate and hold it in position while tapping one of the pad retaining pins from the inboard side of the caliper. Ensure the pad retaining pin locates correctly under the integral pad springs (Figure 8) when it is tapped fully in.

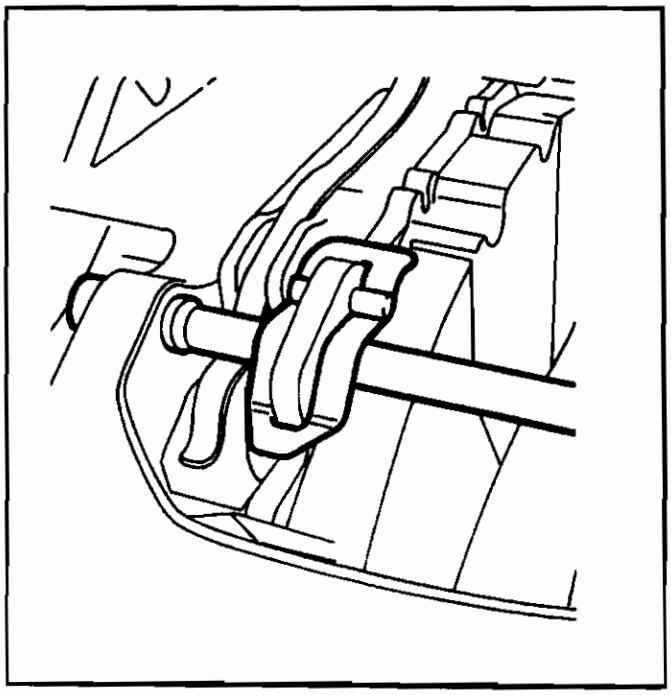

Figure 8.

5. Repeat this operation for the second pad retaining pin and secure both pins with NEW clips.

Pad Adjustment

1. Adjust the pads using a 10 mm socket on the adjuster stem. Depress the stem to engage the adjuster wheel, and with the stem depressed rotate the wrench in the opposite direction to lever travel (brake application stroke) (Figure 4). Continue to adjust the brake until both pads contact the rotor.

CAUTION

Do not exceed the 11 lb. in. (15Nm) maximum torque on the adjuster shaft.

2. De-adjust the brake by depressing and turning the adjuster stem back ½ turn.
3. Ensure the brake rotor is just free to spin 360°.
4. Charge the system with air, release the park brake (push the button in), and uncage the spring brake (where applicable).

NOTE: Before driving the vehicle or applying the park brake, apply the service brake five times at low pressure to ensure correct pad adjustment.

5. Apply the park brake (pull button out), reinstall the wheels, remove the jack stands and lower the vehicle.

BRAKE CALIPER REPLACEMENT

Caliper Removal

1. Chock the wheels.
2. Apply air pressure to release the park brake, then cage the spring brake chamber.
3. Jack up the axle and install jack stands.
4. Remove the wheels and exhaust all air from the system.
5. Remove the clevis pin which secures the air chamber clevis to the actuating lever.
6. Remove the air chamber from the mounting bracket.

CAUTION

Do not allow the chamber to hang by the air line(s). This can damage the lines.

WARNING

Never blow dust from the brake/disc area. Whenever possible remove dry brake dust with a vacuum brush, or wipe the areas with a damp cloth. Never try to accelerate drying time by using an air line.

7. Remove any dirt from the caliper assembly with a wire brush, avoiding damage to the rubber dust covers.
8. Remove the pads and spreader plate as described in the Pad Replacement Section.

WARNING

The caliper assembly is heavy: approximately 120 lbs (54kg). Make sure you have the help of an assistant, or preferably suitable lifting equipment, before attempting to remove the caliper from the vehicle.

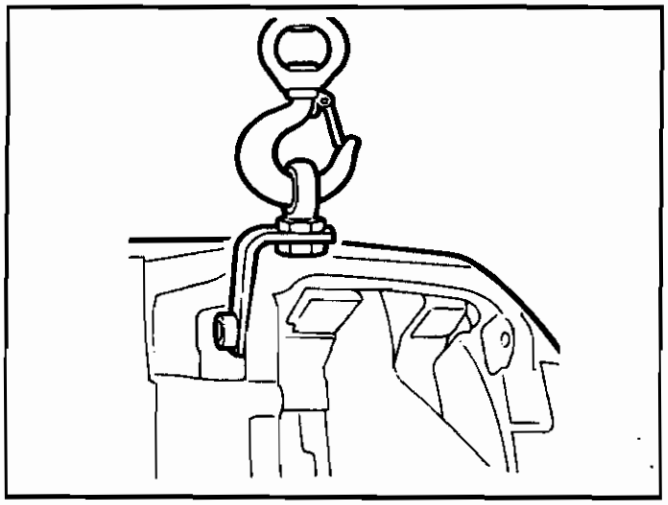

Figure 9.

Figure 9 shows a simple bracket and eye bolt arrangement which allows the caliper assembly to be lifted safely from the axle with simple lifting equipment.

WARNING

When lifting the caliper assembly, avoid trapping your fingers between the caliper housing and carrier bracket. (These parts are free to slide relative to each other.) Also prevent any sudden movement which may result in rapid sliding of the components, which may cause damage to rubber dust cover areas.

9. With the weight of the caliper assembly safely supported, remove the caliper-to-torque plate retaining bolts. Lift the caliper vertically from the axle.

Caliper Installation

WARNING

Take care not to trap fingers during caliper installation.

CAUTION

1. Avoid excessive caliper movement during location.

2. Do not allow the caliper to drop into position on the flange.

Either action could result in damaged dust covers.

1. Preferably using suitable lifting equipment, or with the help of an assistant, carefully lower the caliper assembly into position on the axle mounting flange.

2. Install NEW retaining bolts and torque them to 345 to 405 lb. ft. (460 to 540 Nm).

AIR CHAMBER MOUNTING AND REPLACEMENT

Lever Position

1. Check the operating lever position relative to the air chamber mounting bracket.

2. Push the lever towards the mounting bracket until a resistance is felt.

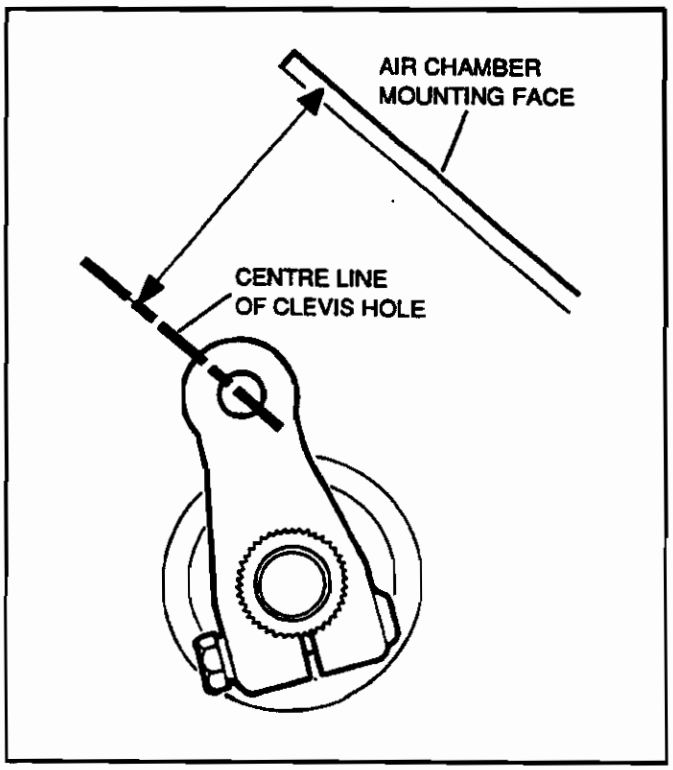

Figure 10.

3. Measure the dimension from the center of the lever clevis hole to the air chamber mounting face on the

mounting bracket while it is being held toward the mounting bracket (Figure 10). Ensure that it conforms to the dimension specified (see Table 2, below).

4. If the lever needs to be repositioned, completely remove the pinch bolt, remove the lever, reposition the lever to the correct position, reinstall the pinch bolt and torque it to 44 54 lb. ft. (60 to 73 Nm).

5. Recheck the dimension from the center of the lever clevis hole to the air chamber mounting face on the mounting bracket.

NOTE: When chambers are replaced, the original type clevis (MGM 8292017) must be used and the push rod must be cut to the length in Table 1.

6. Install the air chamber to the mounting bracket and check the alignment of the clevis and lever clevis hole. Adjust the air chamber clevis where necessary to achieve alignment with the lever hole, then turn it out one (1) additional turn.

CAUTION

Do not attempt to alter the lever setting detailed above to achieve alignment of the clevis and lever hole.

7. Install the clevis pin and a NEW cotter key. Tighten the clevis jam nut. Torque the brake chamber to bracket nuts to 100 to 115 lb. ft. (135 to 155 Nm).

8. Install the spreader plate and new pads as detailed in the pad replacement section.

9. Manually uncage the spring brakes (where applicable). Charge the system with air and apply the park brake to remove drag from the air chamber caging bolt.

10. Remove the cage bolt, and make 5 low pressure service brake applications to automatically adjust the brake.

11. Apply the park brake.

12. Reinstall the wheels, remove jack stands and lower the vehicle to the ground.

Chamber bracket Part no. (LH/RH)	Brake Ass'y Part No. (LH/RH)	Brake Pos'n	Push rod length	Chamber mounting surface to center of Level clevis hole	Chamber manufacturer & Part no.
68321657 / 658	68032365 / 366	Steer Axle	4 ½"	6 3/32 to 6 7/16 (155 163mm	MGM T24 Long Stroke 1428018
68321657 / 658	68032365 / 366	Tag Axle	4 ½"	6 3/32 to 6 7/16 (155 163mm	MGM 16/20 Long Stroke
68321661 / 662	68032399 / 400	Drive Axle	1 3 /4"	3 11/32 to 3 11/16 (85 94mm	MGM 24/30 Long Stroke

TABLE 2

CALIPER HOUSING REPLACEMENT

Removing the Housing

1. Remove the air chamber as detailed in the caliper removal section.

2. Remove the pad wear indicator assembly, brake pads and spreader plate as detailed in the pad replacement section.

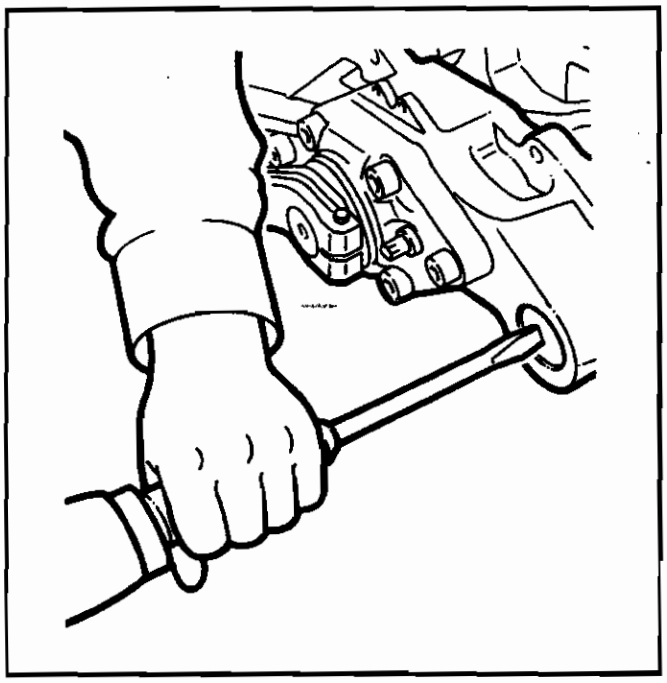

Figure 11.

3. Tap out and DISCARD the guide pin caps (Figure 11).

4. Loosen the guide pin bolts.

5. Supporting the weight of the housing assembly, remove and DISCARD the guide pin bolts and carefully lift the housing assembly from the carrier.

6. Remove the guide sleeves from the caliper housing.

7. Clean the guide sleeves using clear methylated spirits or an acceptable brake cleaner.

8. Examine the sleeves for signs of wear or corrosion. If there is any doubt about the serviceability of the components, replace them with new ones.

9. Clean and inspect the carrier for signs of damage or wear, paying particular attention to the pad abutment areas and guide sleeve location points. If any doubt exists as to the carrier's suitability for further service, replace it with a new carrier.

10. Clean and inspect the brake rotor as detailed in the pad replacement section.

INSTALLING A NEW HOUSING

1. Carefully remove the guide sleeve dust covers from the new housing.

2. Lightly lubricate the inner surface of the dust covers with grease and install them onto the guide sleeves, ensuring they locate correctly in the guide sleeve retainer groove.

3. Apply grease to the guide sleeves and housing guide sleeve bores.

CAUTION

Use only the grease supplied with replacement components or that specified by Lucas and the vehicle manufacturer. Do NOT use any other type of grease under any circumstance. Using an incorrect grease may damage the boots and guide sleeves.

NOTE: See Section 10 "Lubrication" and service bulletin #2625 for complete information on lubrication specifications used on the disc brakes.

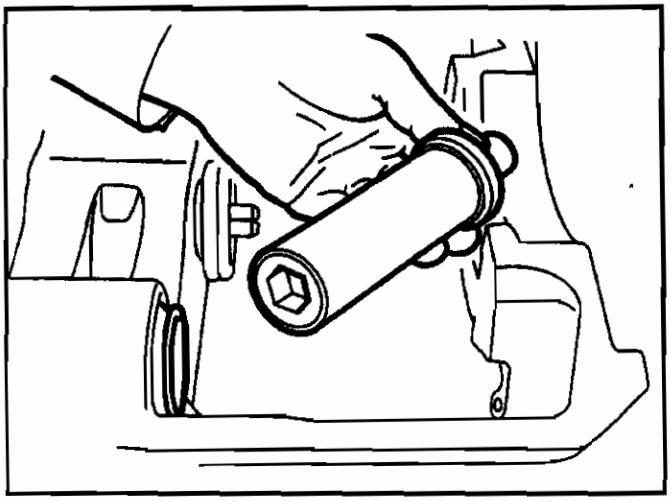

Figure 12.

4. Assemble NEW guide pin bolts into the guide sleeves and carefully install the guide sleeves into the new caliper housing (Figure 12). Installing the guide pin bolts into the guide sleeves, before they are installed into the housing prevents a build-up of grease on the guide sleeve/bolt head faces. Grease build-up could affect the torque level of the guide pin bolts on final tightening

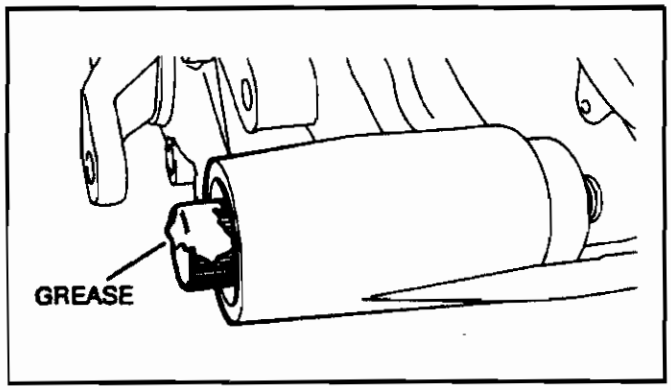

Figure 13.

5. Remove the bolts and wipe off any excess grease from the bolt heads (Figure 13)

6. Reapply grease to the guide sleeve behind the dust cover.

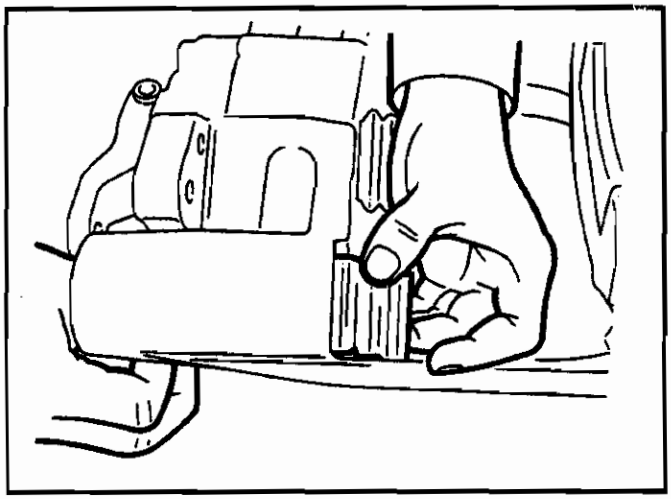

Figure 14.

7. Locate the guide pin boots onto the housing retainers and gently pull the guide sleeve to check the secure location (Figure 14).

CAUTION

Take care not to damage the guide pin or tappet dust covers when locating the housing on the carrier.

8. Carefully lower the housing assembly into position on the carrier and ensure the guide sleeves locate in the counter bores machined in the carrier (Figure 15).

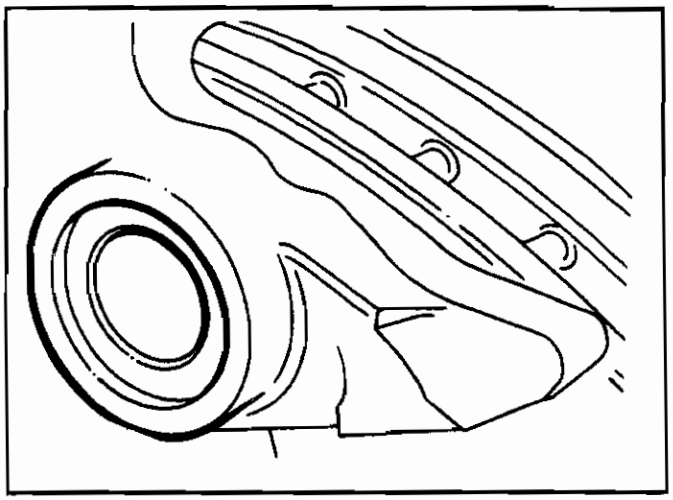

Figure 15.

9. Install the new guide pin bolts and torque them to an initial torque of only 37 lb. ft. (50 Nm) at this stage.

10. Slide the housing backwards and forwards several times to check the smooth movement of the housing on the guide pins. Using a suitable torque angle attachment (Figure 16) locate it on the longer guide pin bolt.

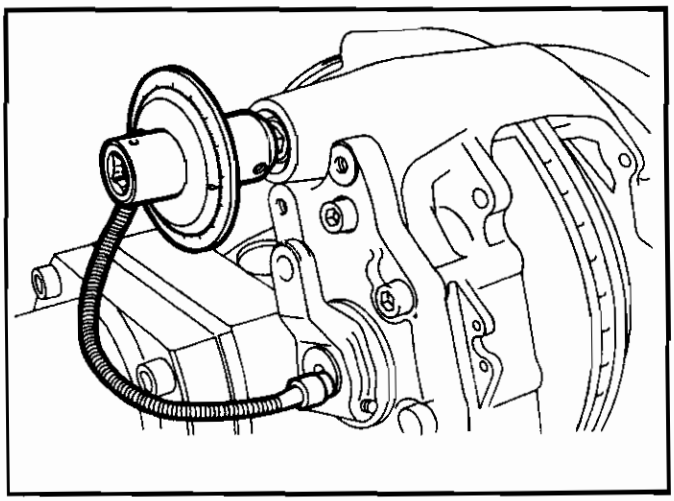

Figure 16.

11. Zero the angle gauge and tighten to 127to137 degrees.

12. Locate the tool on the shorter guide pin bolt, zero the angle gauge again and tighten to 97 to107 degrees. This method of tightening the bolts ensures an accurate and constant bolt clamp load.

NOTE: The angle measurement must never be less than the minimum figure quoted above.

13. Check the free movement of the housing assembly on the guide pins again. Using a copper-faced mallet, carefully tap one of the NEW guide pin caps into the housing until it retains itself.

14. Then, using a suitably-sized tool or hexagon socket (Figure 17), tap the cap into the bore until it stops against the shoulder.

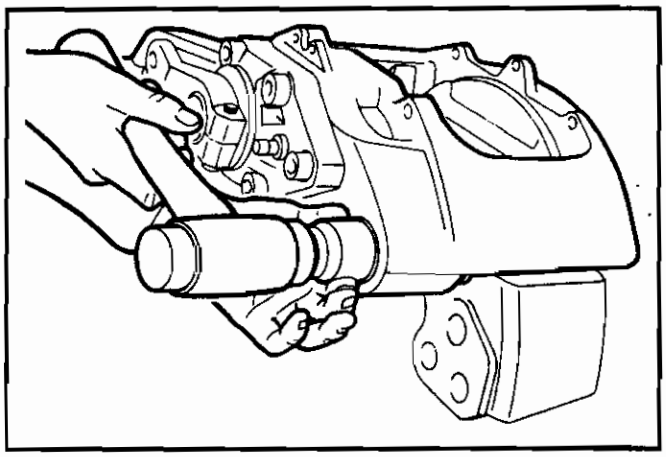

Figure 17.

CAUTION

NEVER REUSE GUIDE PIN CAPS

15. Reassemble the brake and check the operating lever setting as detailed in the brake assembly replacement section.

TAPPET, DUST COVER & RETAINER REPLACEMENT

Dust Cover Replacement

1. Remove the pads and spreader plate as detailed in the pad replacement section.

2. Push the housing assembly inboard to gain maximum access to the tappet area.

CAUTION

Do not allow dirt or debris into the exposed tappet / housing areas.

3. Thoroughly clean around the tappet dust cover area with an acceptable brake cleaner or clear methylated spirits.

4. Remove the old dust cover and discard it.

5. Examine the exposed areas of the tappet and dust cover location on the housing for signs of corrosion or damage. If any doubt exists about a part's condition, replace it with a new component, following the procedure detailed in the tappet screw and dust cover retainer replacement section.

6. Lightly lubricate the internal surface of the new dust cover and the location areas of the tappet screw and housing with the grease provided.

CAUTION

Do not use any other type of grease.

7. Carefully install the dust cover over the tappet and locate it onto the housing.

8. Locate the dust cover into the groove on the head of the tappet and ensure that both dust cover location points of the housing and tappet are secure.

9. Reassemble the brake as detailed in the pad replacement section.

Tappet & Dust Cover Retainer Replacement

1. Remove the housing as described in the housing replacement section.

2. Remove the dust cover as described in the dust cover replacement section.

3. Unscrew the tappet screw from the housing.

CAUTION

Do not allow dirt or debris to enter the exposed housing / adjuster nut area

4. Clean the dust cover retainer and the adjacent area of the housing.

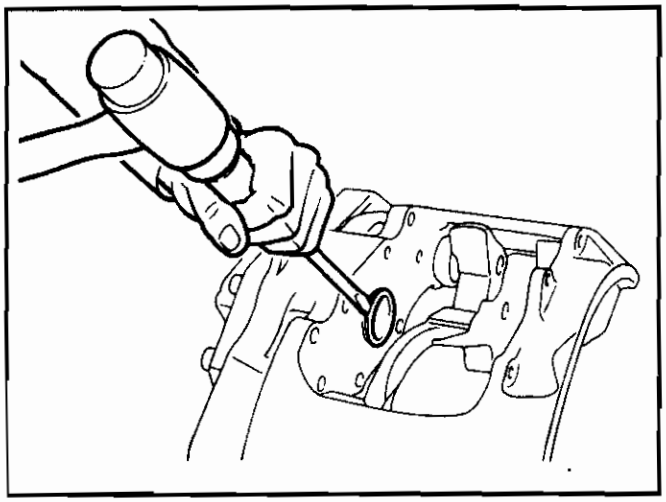

Figure 18.

5. Examine the dust cover retainer for any signs of damage. Carefully tap the damaged retainer out of the housing (Figure 18).

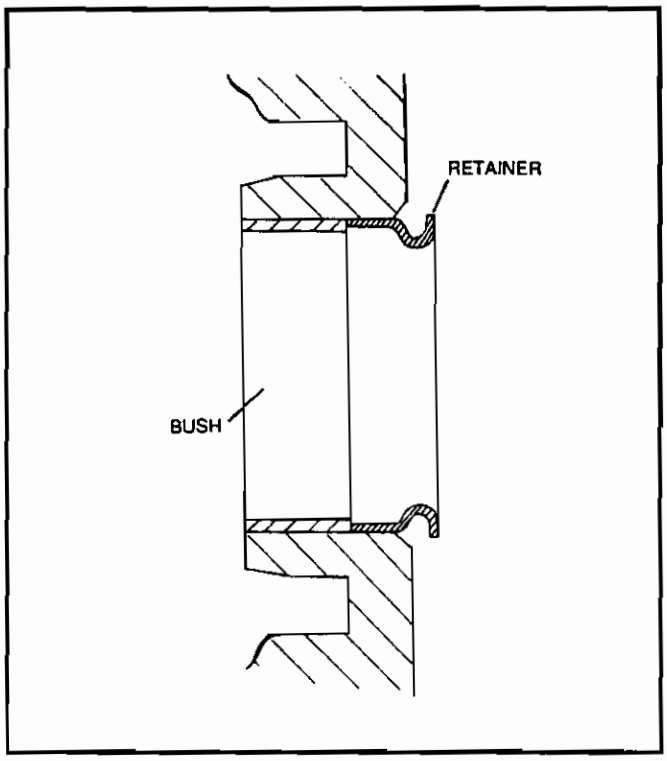

Figure 19.

6. Place a new retainer in the mouth of the housing and carefully tap it in until it abuts the bushing (Figure 19).

NOTE: Do not disturb the position of the bushing in the housing bore when installing a new dust cover retainer.

7. Wipe the grease from the front face of the adjuster nut and apply the new, Lucas-recommended grease provided with the service components.

8. Apply the same grease to the internal threads of the adjuster nut and screw the new tappet into the adjuster nut, leaving approximately 0.75in (20mm) of the tappet extended from the adjuster nut to allow easier dust cover installation.

9. Install a new dust cover as detailed in the dust cover replacement section and reinstall the housing assembly as detailed in the housing replacement section.

GUIDE SLEEVE, DUST COVER, RETAINER & BUSHING REPLACEMENT

Guide Sleeve Removal

1. Remove the housing assembly as described in the housing replacement section.

2. Move it to a suitable workbench and place it upside down to expose the guide sleeve areas.

3. Detach the guide sleeve dust covers from the housing and withdraw the guide sleeves and dust covers from the housing.

Removing Bushings & Dust Cover Retainers

NOTE: The process of removing the guide sleeve bushings from the housing will at the same time remove the dust cover retainers which are pressed into the mouth of the guide sleeve bores.

Before removing the brass bushing from the short guide sleeve bore, mark its position precisely as follows:

1. Turn the housing so the operating shaft faces up. Looking into the guide sleeve bore, observe the two notches on the bushing edge.

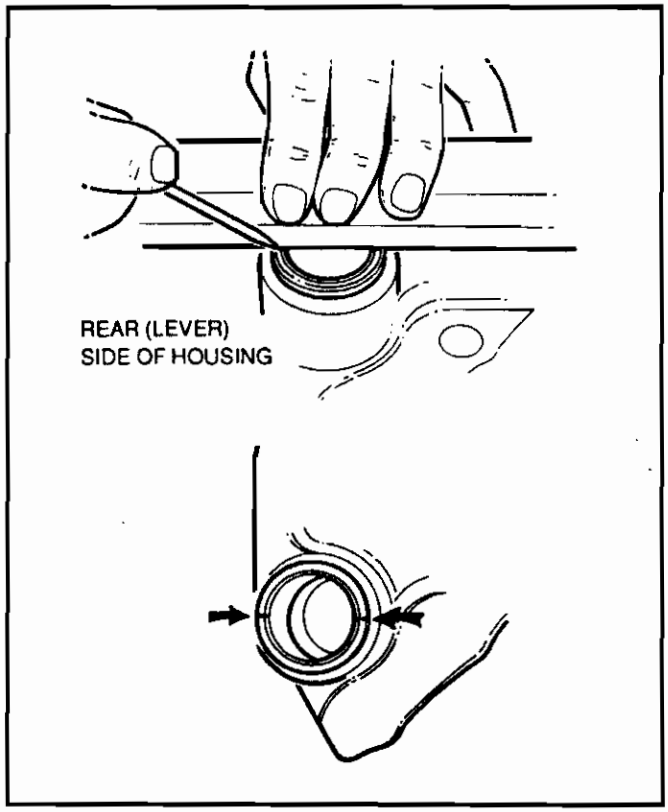

Figure 20.

2. Join the two notches with a rule or straight edge and mark the housing turret (Figure 20).

3. Using a suitable drift, press out the brass bushing from the short guide sleeve bore and the two plastic bushings from the longer guide sleeve bore, with the dust cover retainers. Ensure the housing bore is not damaged.

Installing New Bushings

1. Clean the guide sleeve bores with an acceptable brake cleaner or clear methylated spirits.

2. Examine the condition of the bores for wear, corrosion or damage.

3. If there is any doubt in a part's suitability for further service, replace it with a new housing assembly.

CAUTION

Install both the brass and plastic bushings from the inboard (lever side) of the housing. Do NOT attempt to install from the outboard (tappet side) of the housing as access is limited and may cause misalignment or damage to the bushing/caliper housing.

Brass Bushing short guide sleeve

1. The brass bushing has two notches on each edge. Place the bushing on the housing and ensure that the notches align with the marks on the guide sleeve turret.

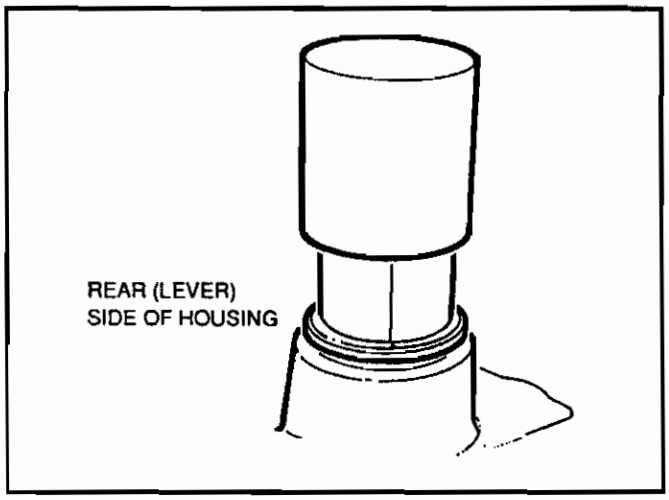

Figure 21.

2. Press the bushing into the bore with a suitable drift (Figure 21). The front edge of the bushing should be flush with the recess in the mouth of the housing bore (Figure 22).

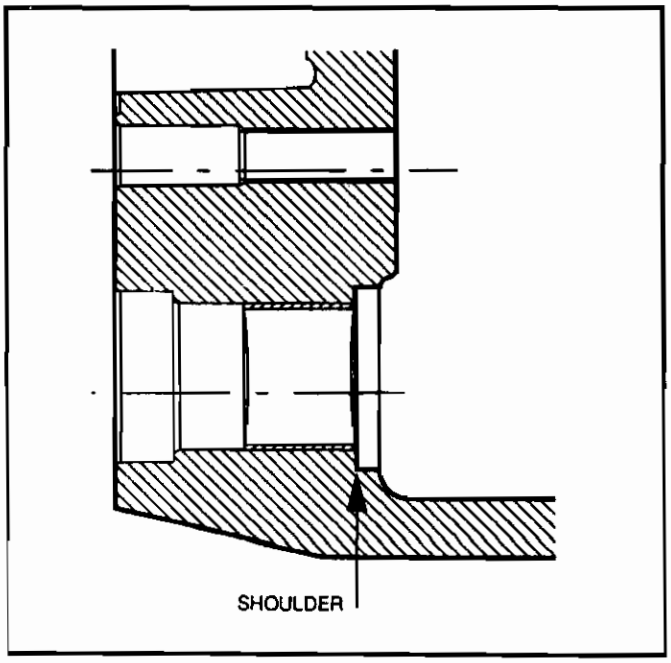

Figure 22.

NOTE: Do not press the bushing past the recessed shoulder.

Plastic Bushings longer guide sleeve

1. Press the first bushing into the housing with a suitable drift.

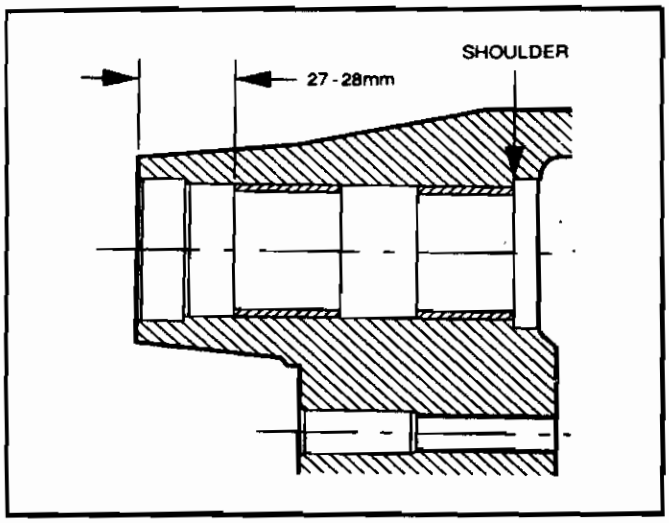

Figure 23.

2. The front edge of the bushing should be flush with the recess in the mouth of the housing bore (Figure 23).

3. Press the second plastic bushing into the bore with a suitable drift, to a depth of 1.00 in. (27 to 28mm) (Figure 26).

NOTE: Do not press the bushing past the recessed shoulder.

Installing Dust Cover Retainers

1. Place a new dust cover retainer into the mouth of a guide sleeve bore, tappet side.

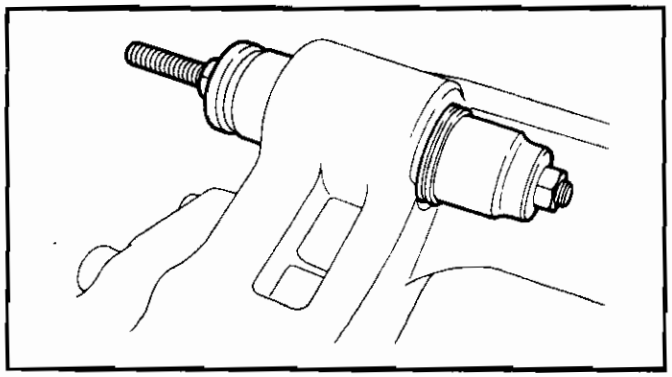

Figure 24.

2. Using a length of threaded rod and suitable sockets and washers as shown in Figure 24, carefully pull the retainer squarely into position until it contacts the recessed shoulder in the mouth of the bore (Figure 25).

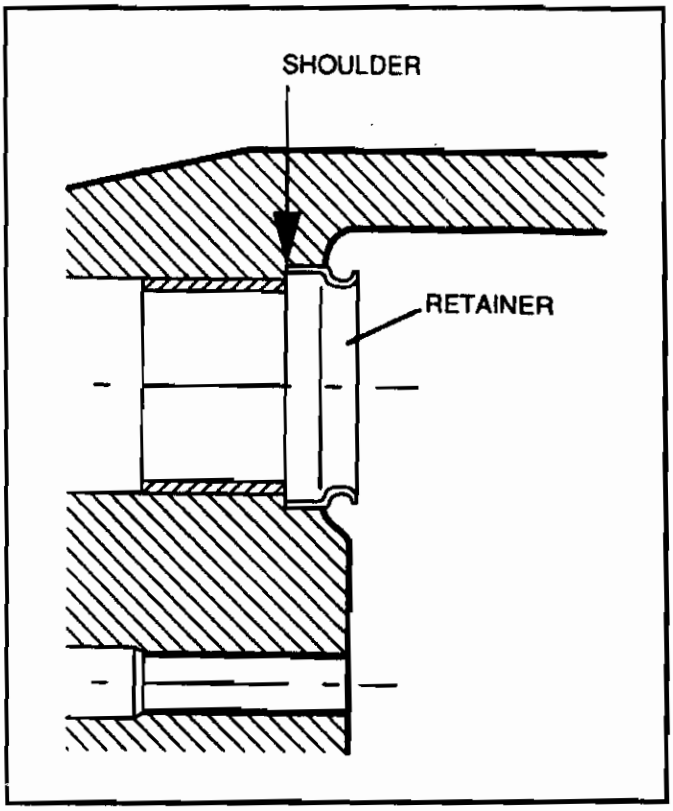

Figure 25.

CAUTION

Do not damage the dust cover location lip on the retainer

3. Install the second retainer following the same procedure.

Installing Guide Pins & Dust covers

1. Lightly lubricate the new guide sleeves, including the dust cover location groove, the dust cover retainers in the housing and the guide pin dust covers, on the inside only, with the grease provided in the service kit or specified by Lucas and the vehicle manufacturer.

CAUTION

Use only the grease supplied with replacement components/kits or that specified by Lucas and the vehicle manufacturer. Do NOT use any other type of grease under any circumstance. See Section 10 of this manual for lubrication specifications.

2. Install the new dust covers onto the guide sleeves, ensuring they locate correctly in the guide sleeve retainer groove.

3. Assemble the guide pin bolts into the guide sleeves and carefully install the guide sleeves into the caliper housing (Figure 12). The action of fitting the guide pin bolts into the guide sleeves, before they are fitted into the housing, prevents a build-up of grease on the guide sleeve/bolt head faces which could affect the torque level of the guide pin bolts on final tightening.

4. Remove the bolts and wipe off any excess grease from the bolt heads (Figure 13) and reapply it to the guide sleeve, behind the dust cover.

5. Locate the guide pin boots onto the housing retainers and gently pull the guide sleeve to check the secure location (Figure 14).

6. Reinstall the housing assembly and torque the guide pin bolts as detailed in the housing replacement section.

NOTE: Do not install the new outboard pad at this point.

ROTOR INSPECTIONS

When inspecting or relining the brakes, the rotor thickness should be measured and both surfaces inspected for the following conditions:

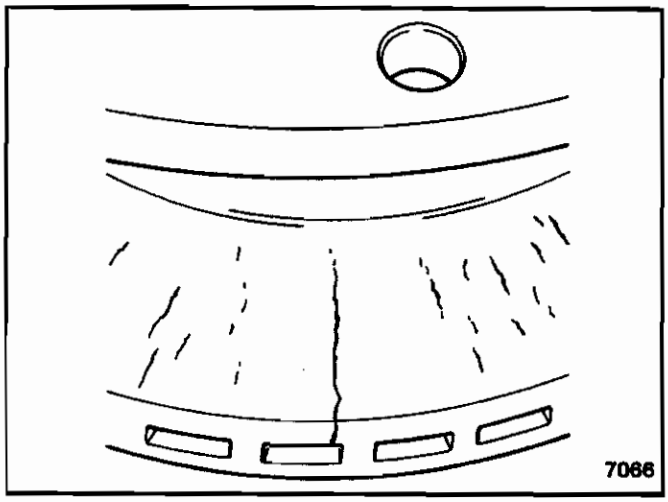

Figure 26. Rotor with Cracks

Cracks

A crack can extend through a section of the rotor, and, when heated through normal braking they can open and separate. This may cause rapid lining wear. Replace the rotor (Figure 26).

Heat Checking

Heat checking is caused by heat and appears as cracks in the surface of the rotor. There are two categories of heat checking, light and heavy (Figure 27).

Light heat checking is very fine, tight cracks. Light heat checking is normal. A rotor with light heat checking can continue to be used. Heavy heat checking is evident by surface cracks that have width and depth and extend some distance. Replace or resurface the rotor if heat checking is observed.

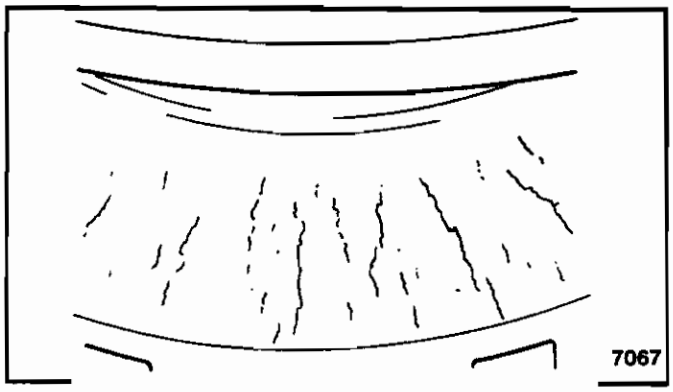

Figure 27. Rotor with Heat Checking

Grooves Or Scores

Check booth sides of the rotor for deep grooves or scores (Figure 28). If the grooves or scores are not too deep, the rotor may continue to be used. If the grooves or scores are deep, or when installing a new lining, refinish the rotor (or replace it if the thickness is less than 41 mm).

WARNING

If any cracks, heavy heat checking or deep groves are found, always replace the rotor. Always replace a damaged rotor.

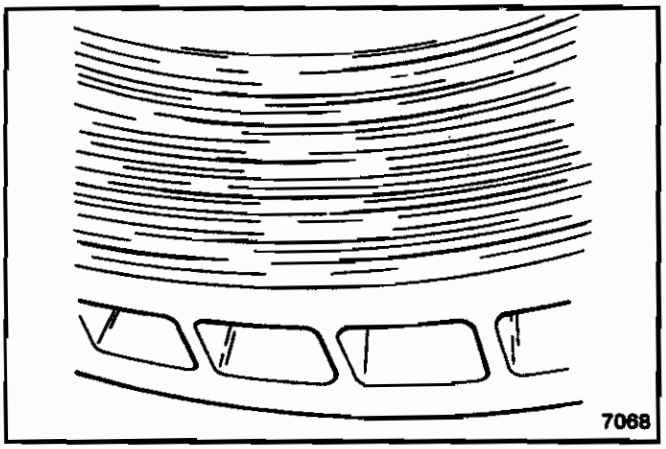

Figure 28. Rotor with Grooves and Scores

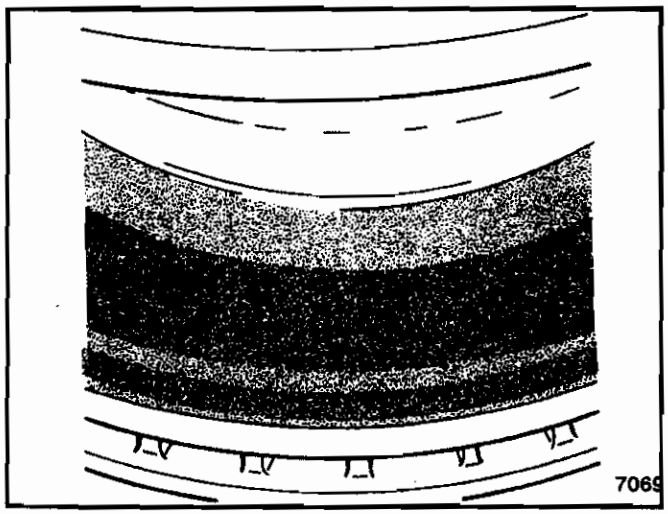

Figure 29. Rotor with Blue Bands and Marks

Bluing

Blue marks or bands indicate that the rotor had become very hot (Figure 29). If blue marks or bands are present, use the troubleshooting guide to find and correct the cause of the problem.

PARTS CLEANING AND INSPECTION

WARNING

If cleaning solvents, alkaline solutions or hot dip tanks are used incorrectly, serious personal injury can occur. To prevent injury, follow the instructions supplied by the manufacturer. Do not use gasoline to clean parts. Gasoline can explode or burn and cause serious injury.

Solvent cleaners can be flammable, poisonous, and can cause burns, Use safe shop practices when using solvents in the cleaning processes, and follow these rules:

- Wear eye protection.
- Wear clothing that protects the skin.
- Make sure there is enough ventilation
- Do not use gasoline, or solvents that contain gasoline.
- Follow the manufacturer's instructions for safe use of the solvent.

Ground or Polished Metal Parts

Use a cleaning solvent to clean metal parts and surfaces that are ground or polished. Kerosene or diesel fuel can be used as cleaning solvents.

CAUTION

Do not clean ground or polished metal parts in a hot solution tank or with water, steam or alkaline solutions. These solutions will cause corrosion of the parts.

Rough Metal Parts

Clean rough metal parts with cleaning solvents.

Rubber or Plastic Parts

NOTE: Do not use cleaning solvents or alkaline solutions on rubber or plastic parts or they will be damaged.

Dry Parts

Completely dry all parts immediately after cleaning them. Use soft, clean paper or cloth rags, or use compressed air.

Inspect Parts

It is very important to inspect all parts before reassembling them. Inspect the parts for any signs of wear or damage. Repair or replace any worn or damaged parts. If worn or damaged parts are not replaced, they can cause poor brake performance, premature lining wear, or a brake failure.

CORROSION PROTECTION

To prevent corrosion, apply a thin layer of brake grease to the parts that have been cleaned, dried and inspected and will be reassembling. Do NOT apply or allow grease or oil to get on the linings or rotor.

If the parts are to be stored, apply a special material that prevents corrosion and rust to all surfaces. Do not apply the material to the brake linings or the rotor. Store the parts inside special paper or other material that prevents corrosion and rust.