# APPENDIX A

## SECTION A4-(CENTER-WING SECTION)

# CENTER WING TANK - GENERAL CONFIGURATION

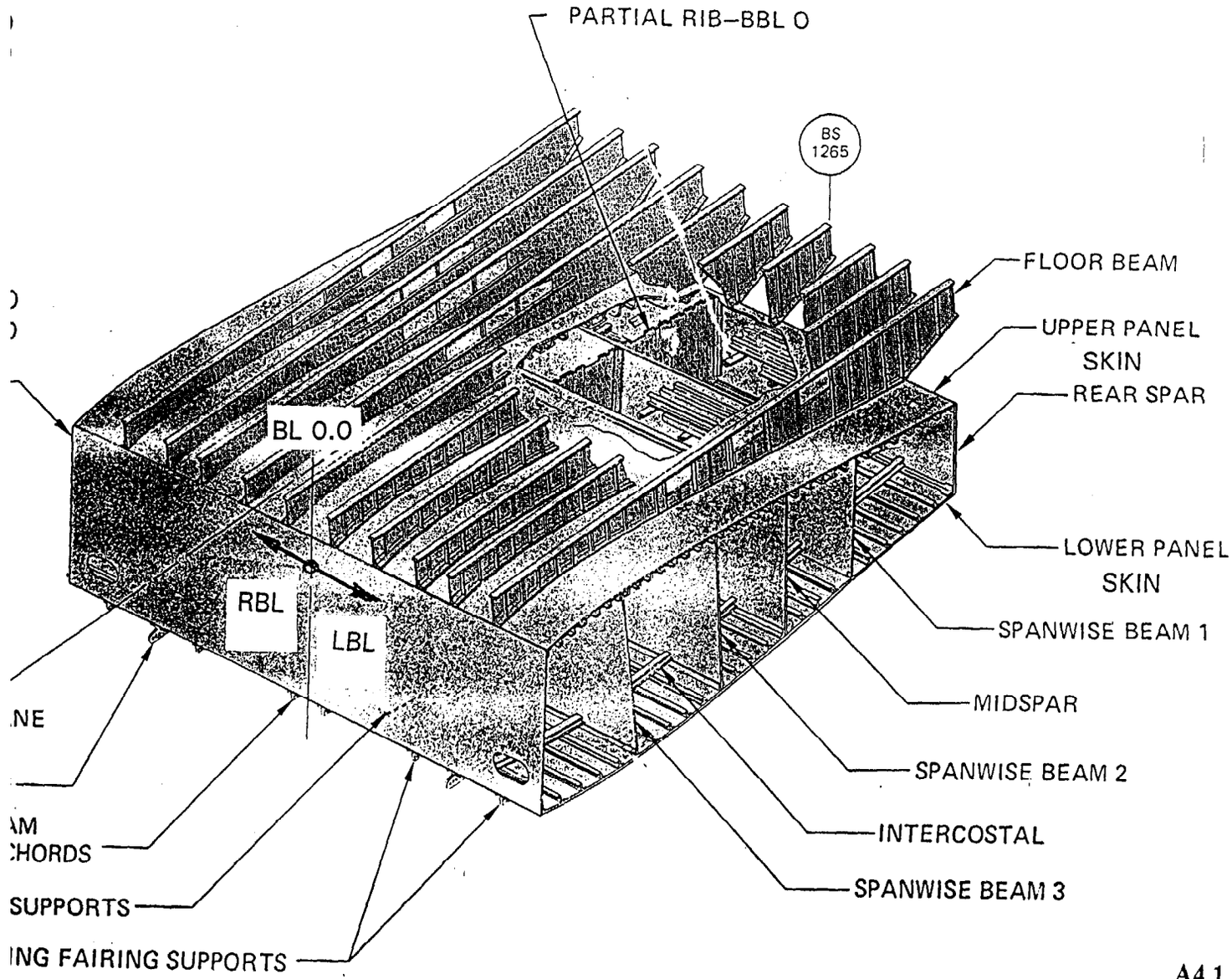


FIGURE 1

# CENTER WING TANK - UPPER SKIN

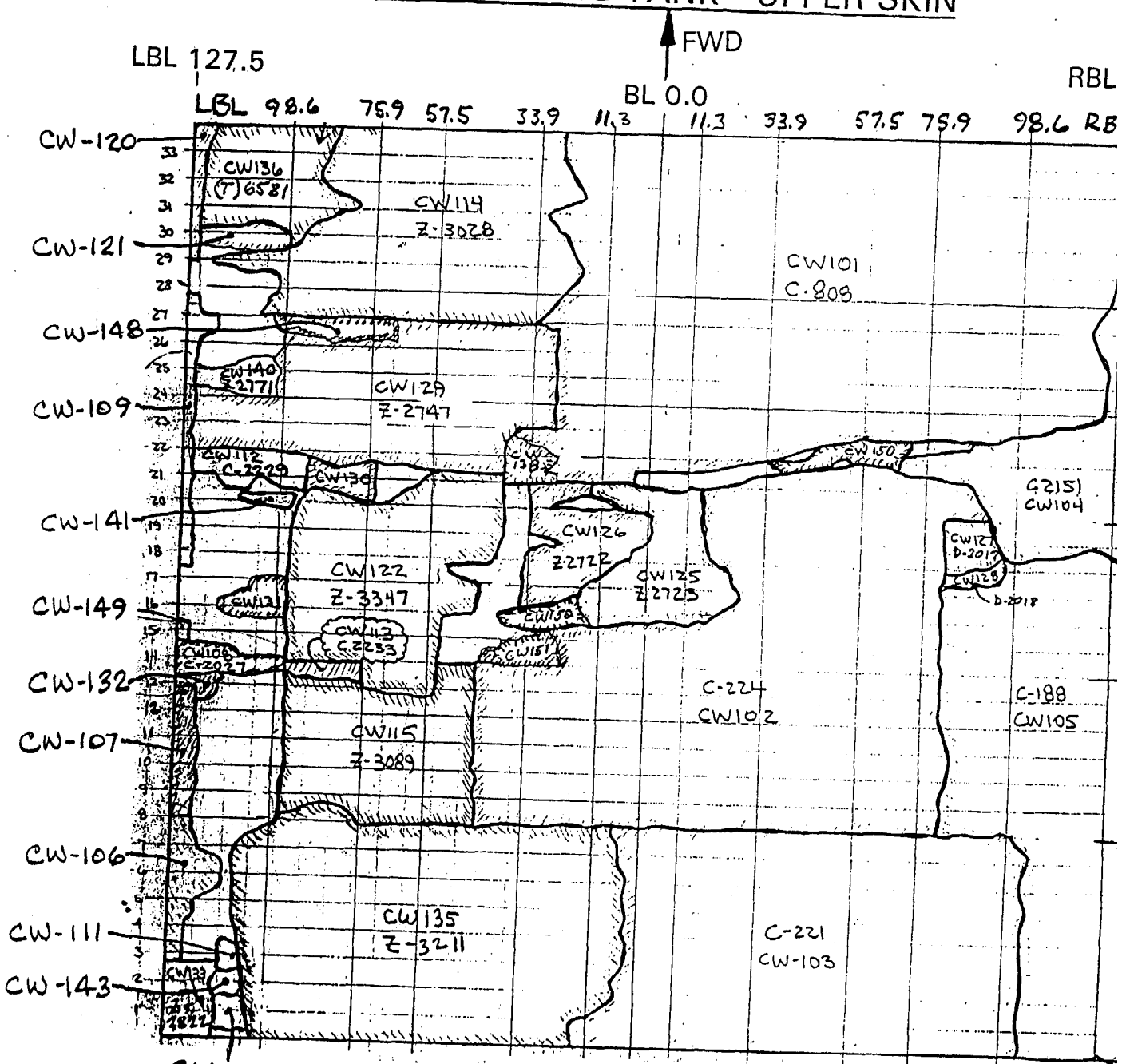

# CENTER WING TANK - LOWER SKIN

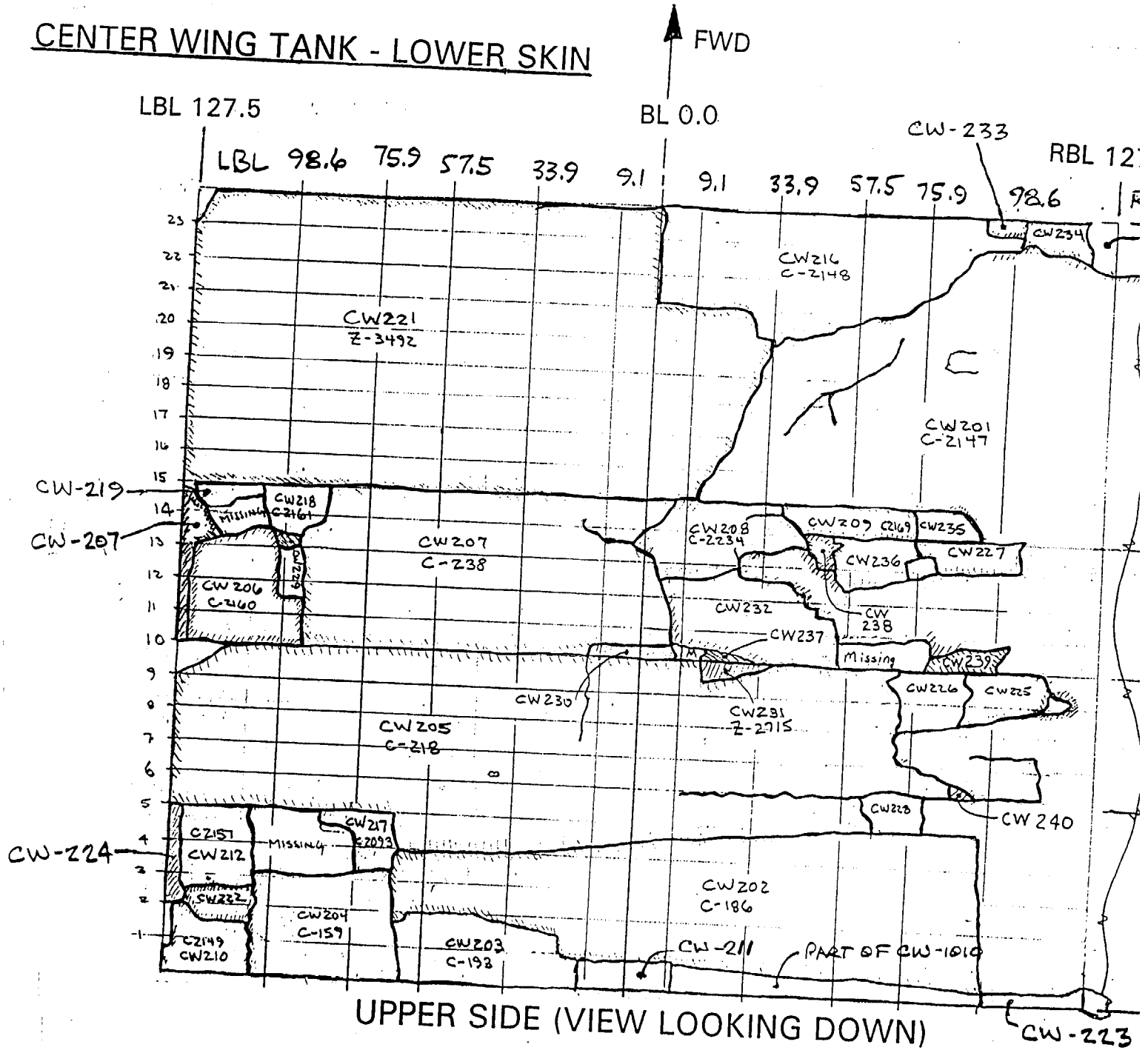

# CWT SIDE-OF-BODY RIB RBBL 127.5

ITEMS NOT SHOWN
CW-315, 316, 318, 319
CW-320, 321, 322

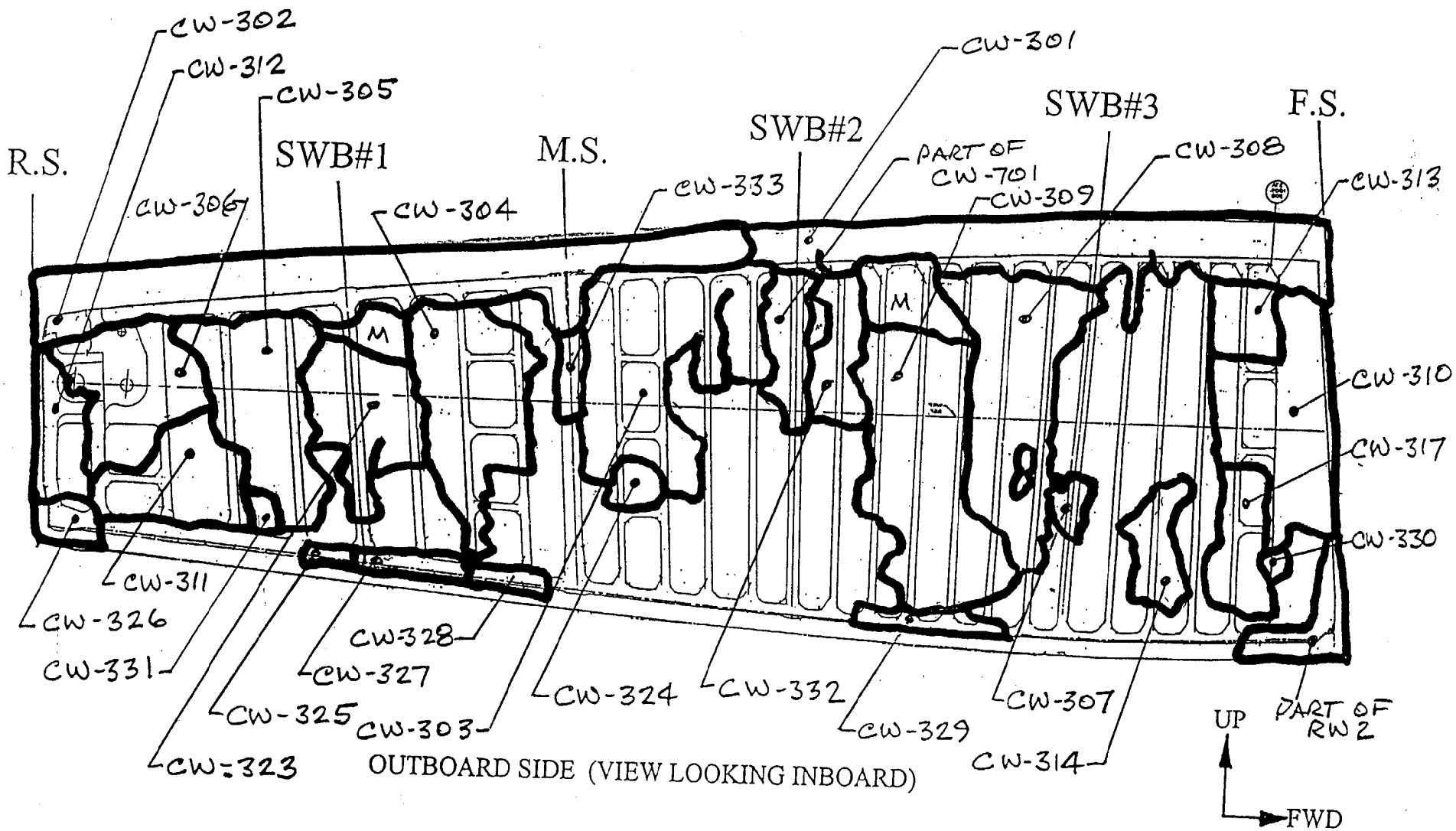

# CWT SIDE-OF-BODY RIB LBBL 127.5

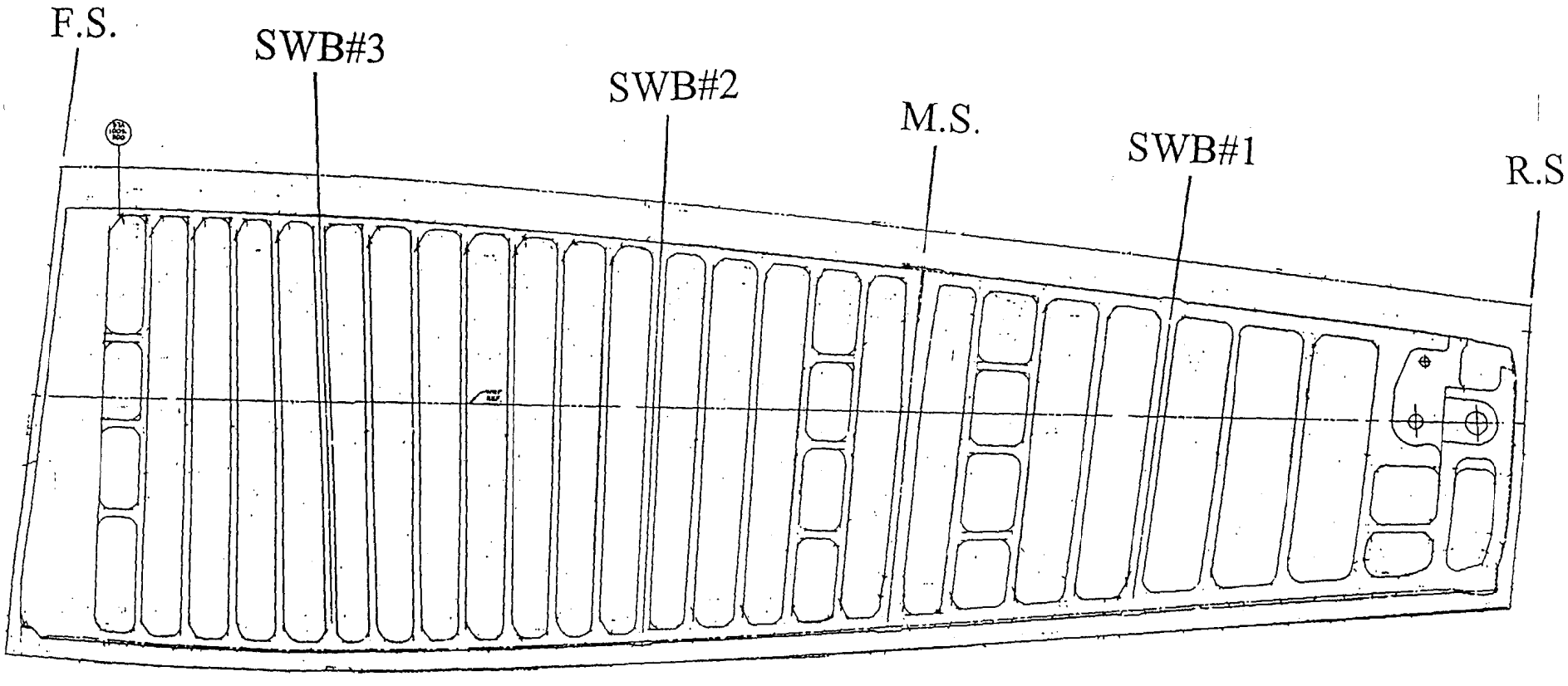


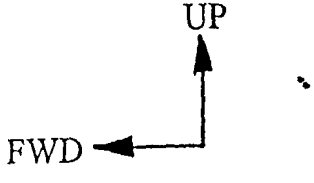


OUTBOARD SIDE (VIEW LOOKING INBOARD)

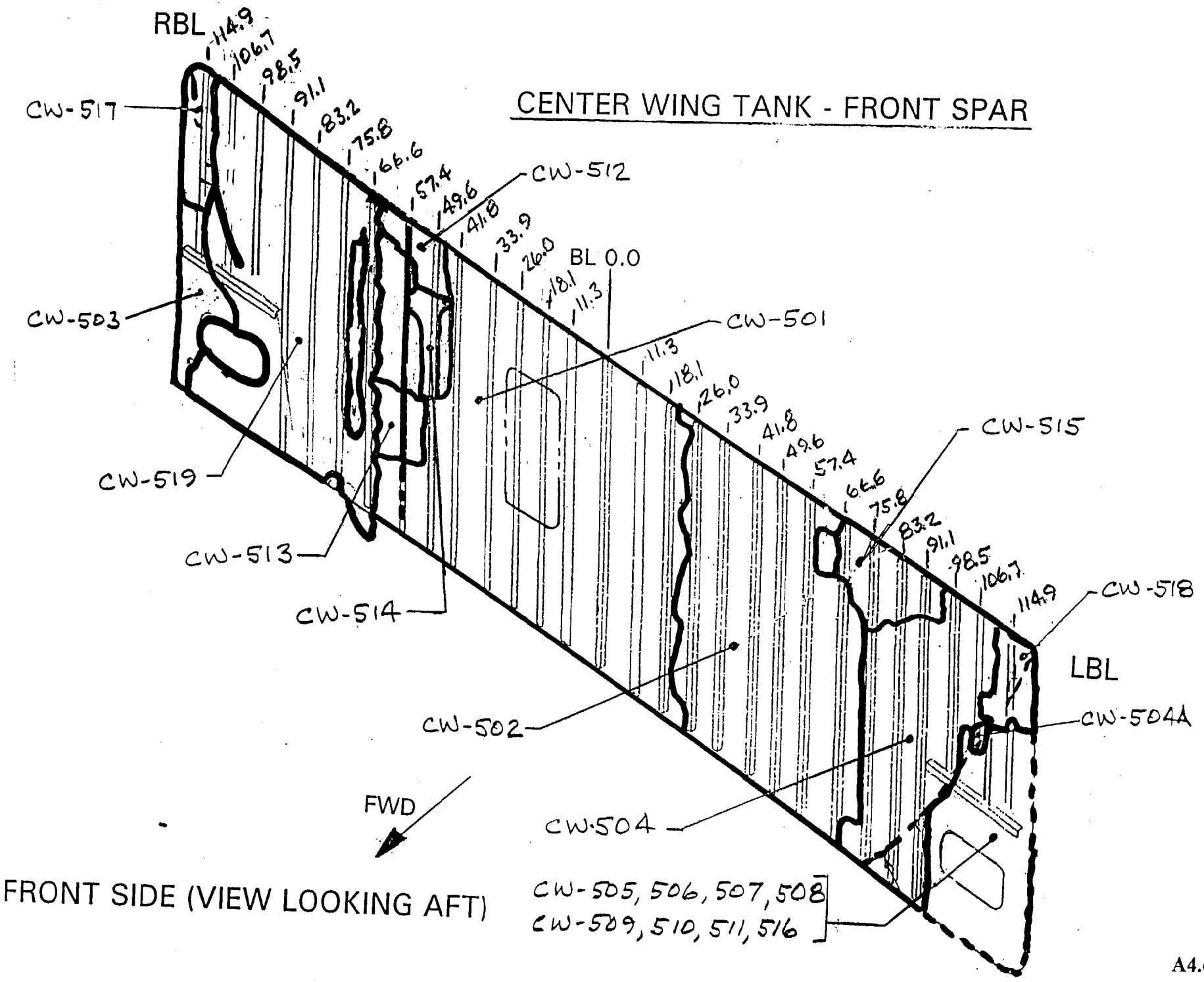
CENTER WING TANK - FRONT SPAR
RBL
114.9
106.7
98.5
91.1
83.2
75.8
66.6
57.4
49.6
41.8
33.9
26.0
18.1
11.3
BL 0.0
11.3
18.1
26.0
33.9
41.8
49.6
57.4
66.6
75.8
83.2
91.1
98.5
106.7
114.9
LBL
CW-517
CW-512
CW-503
CW-501
CW-519
CW-515
CW-513
CW-514
CW-518
CW-502
CW-504A
CW-504
FWD
CW-505, 506, 507, 508
CW-509, 510, 511, 516
FRONT SIDE (VIEW LOOKING AFT)

# CENTER WING TANK - SPANWISE BEAM #3

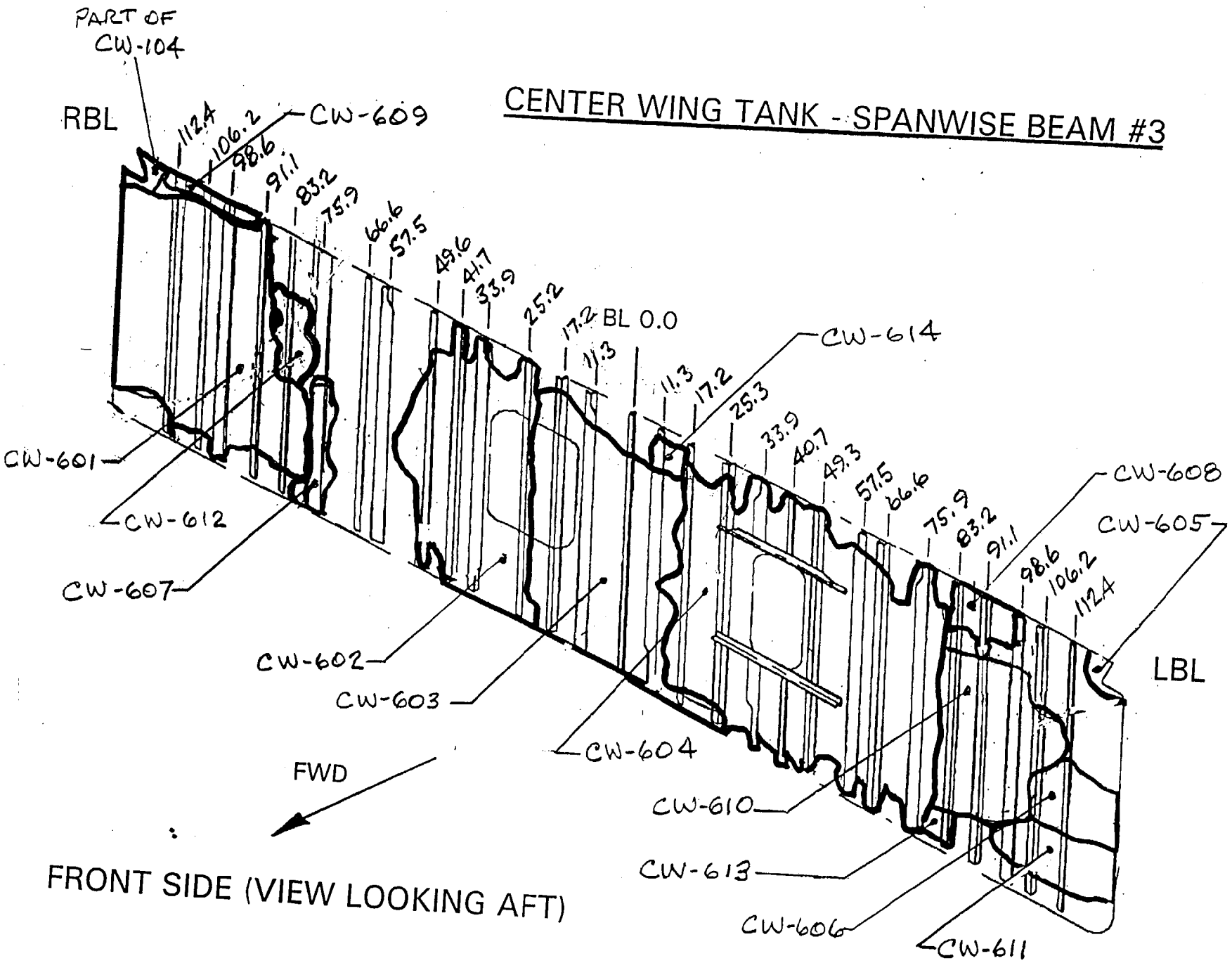

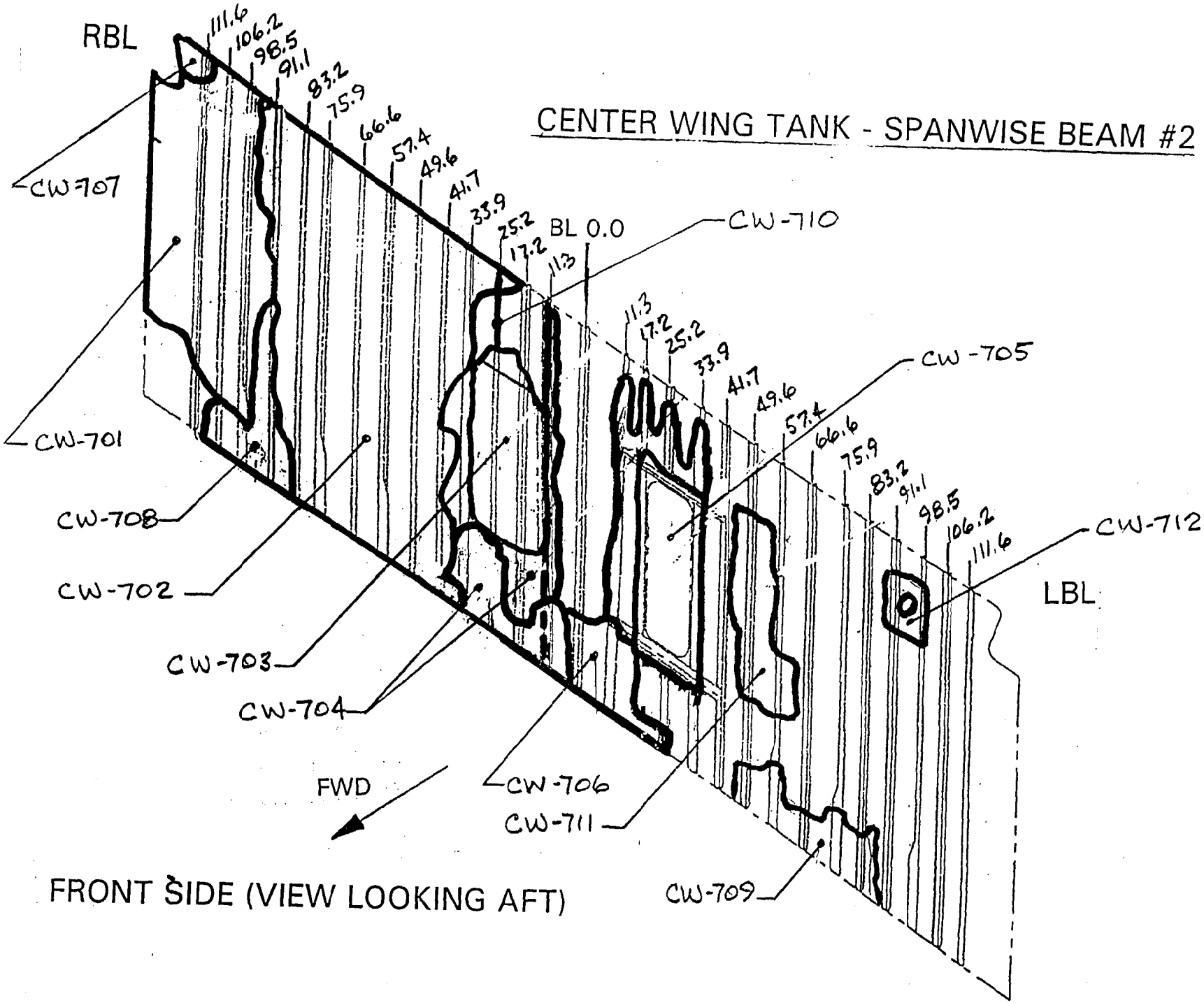
CENTER WING TANK - SPANWISE BEAM #2
RBL
LBL
BL 0.0
111.6
106.2
98.5
91.1
83.2
75.9
66.6
57.4
49.6
41.7
33.9
25.2
17.2
11.3
CW-707
CW-701
CW-708
CW-702
CW-703
CW-704
CW-706
CW-711
CW-709
CW-710
CW-705
CW-712
FWD
FRONT SIDE (VIEW LOOKING AFT)

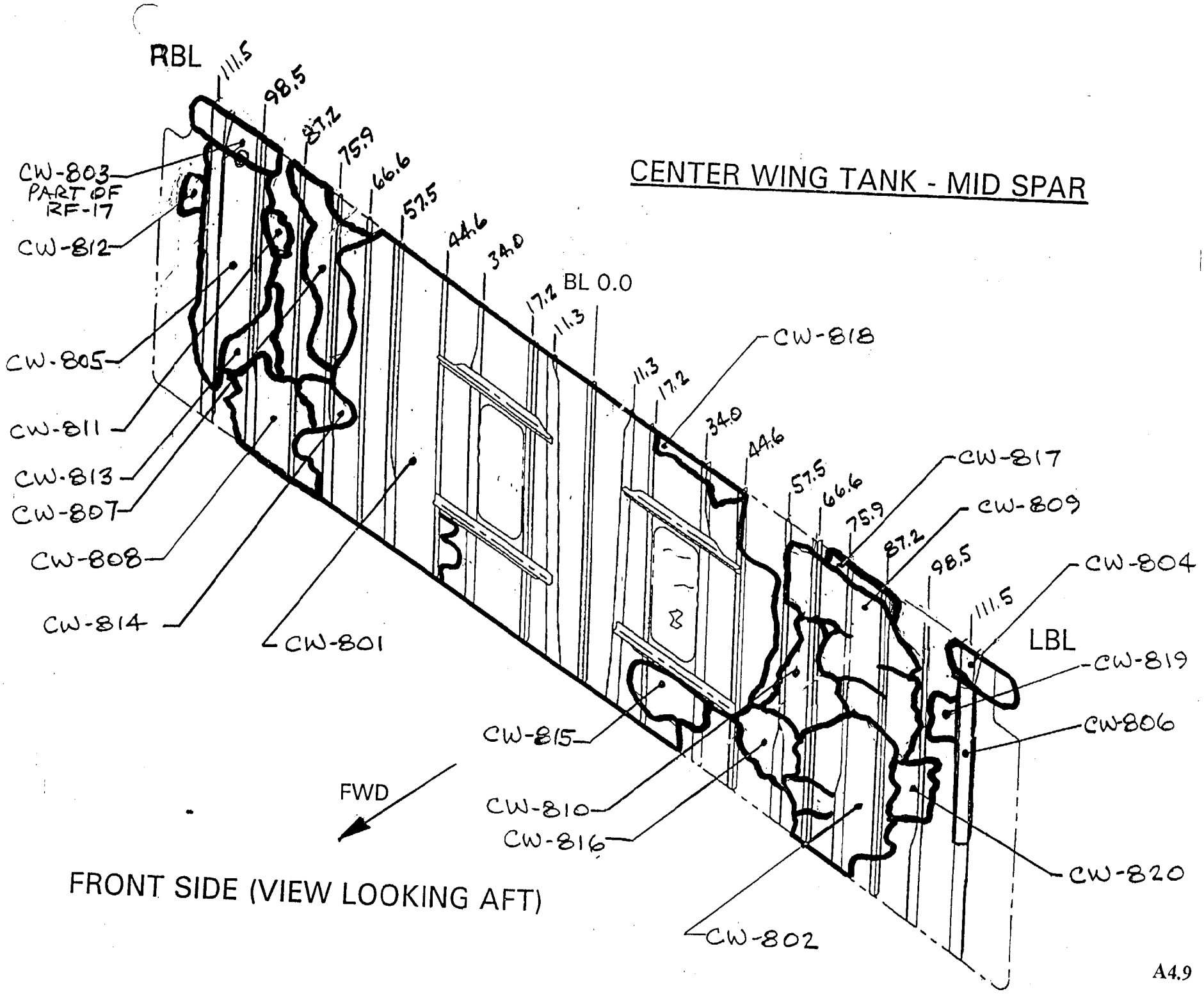
CENTER WING TANK - MID SPAR
RBL
LBL
BL 0.0
111.5
98.5
87.2
75.9
66.6
57.5
44.6
34.0
17.2
11.3
CW-803
PART OF
RF-17
CW-812
CW-805
CW-811
CW-813
CW-807
CW-808
CW-814
CW-801
CW-818
CW-817
CW-809
CW-804
CW-819
CW-806
CW-820
CW-815
CW-810
CW-816
CW-802
FWD
FRONT SIDE (VIEW LOOKING AFT)

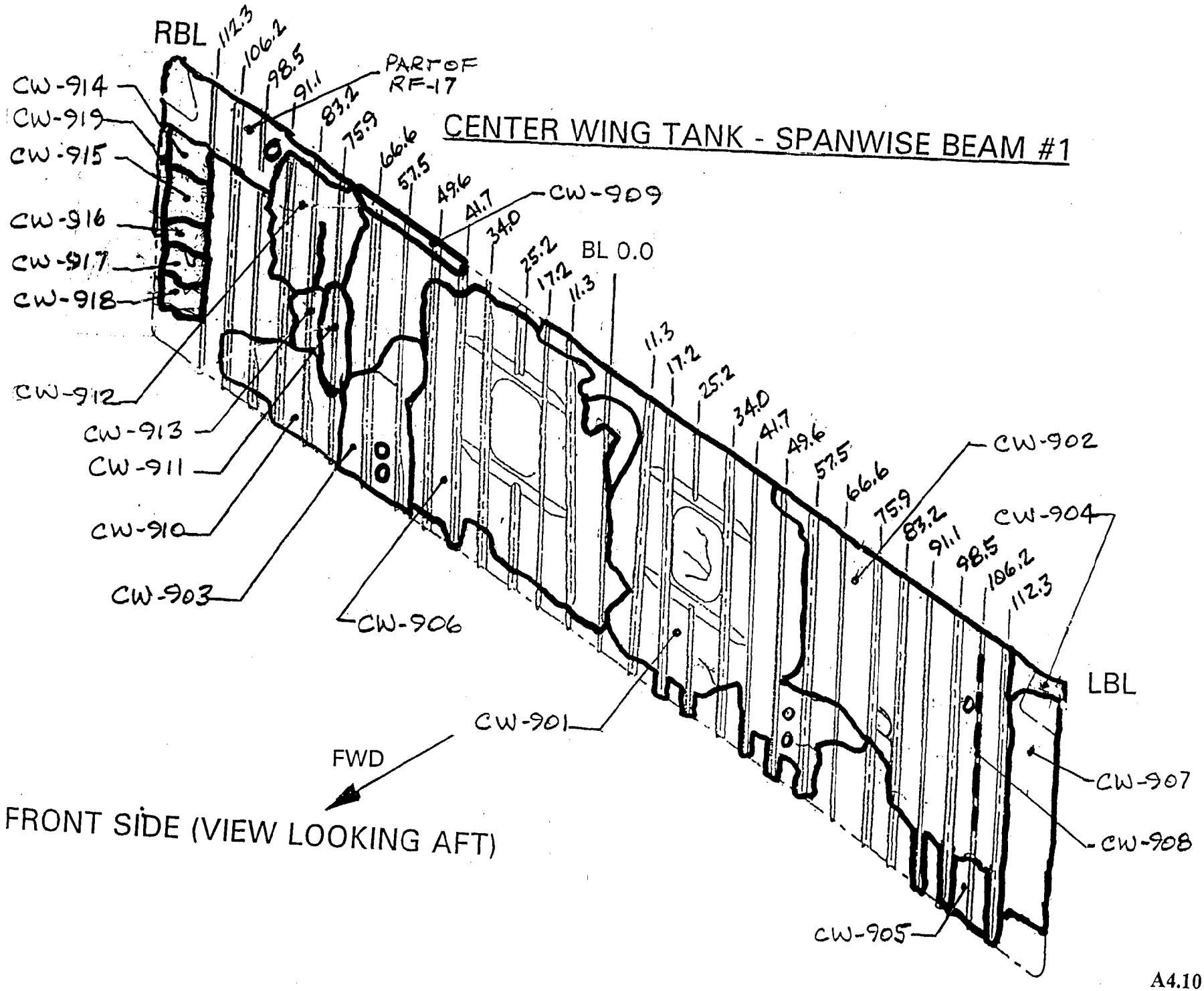
CENTER WING TANK - SPANWISE BEAM #1
RBL
LBL
BL 0.0
112.3
106.2
98.5
91.1
83.2
75.9
66.6
57.5
49.6
41.7
34.0
25.2
17.2
11.3
PART OF RF-17
CW-914
CW-919
CW-915
CW-916
CW-917
CW-918
CW-912
CW-913
CW-911
CW-910
CW-903
CW-906
CW-909
CW-901
CW-902
CW-904
CW-907
CW-908
CW-905
FWD
FRONT SIDE (VIEW LOOKING AFT)

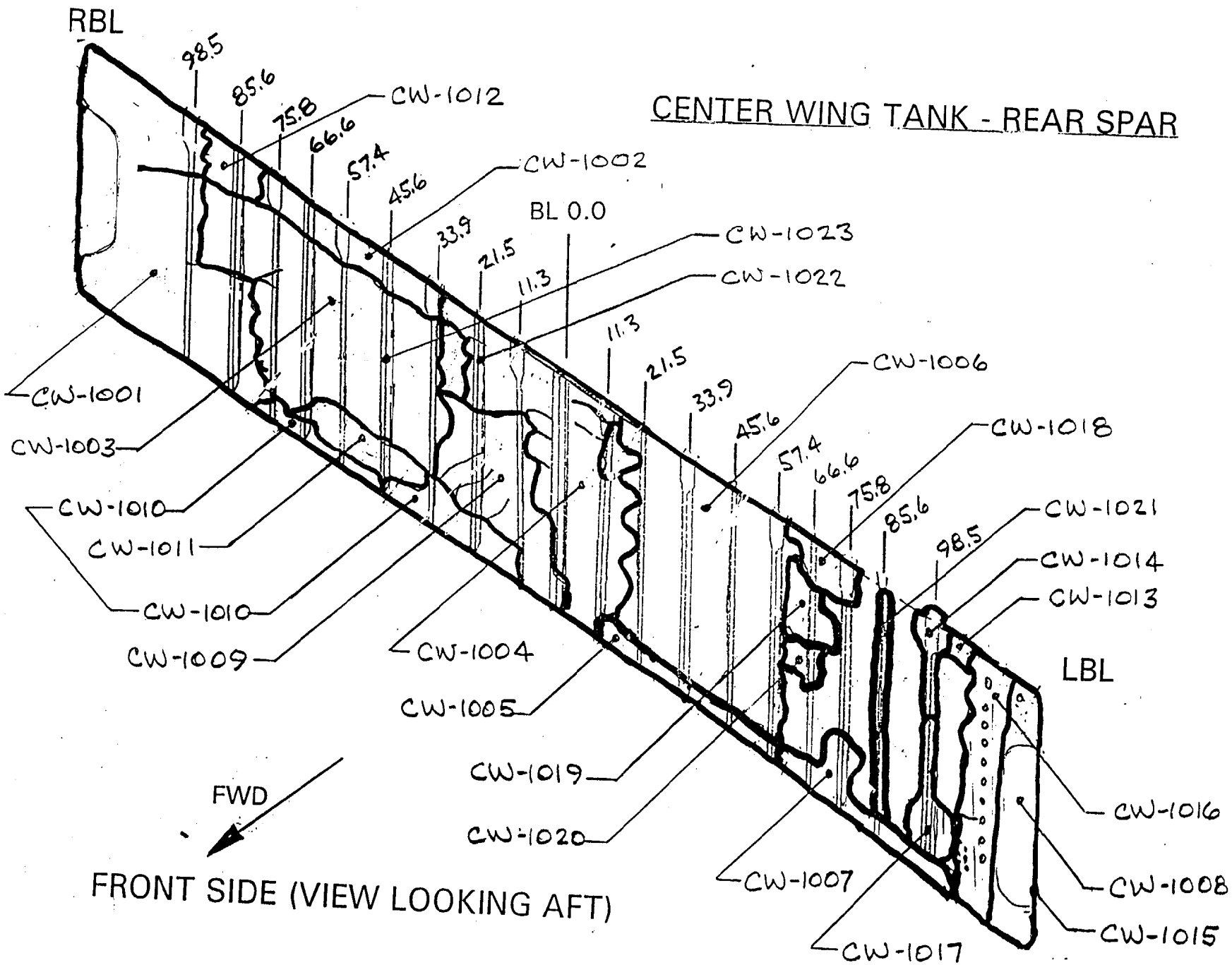
CENTER WING TANK - REAR SPAR
RBL
LBL
BL 0.0
98.5
85.6
75.8
66.6
57.4
45.6
33.9
21.5
11.3
11.3
21.5
33.9
45.6
57.4
66.6
75.8
85.6
98.5
CW-1012
CW-1002
CW-1023
CW-1022
CW-1006
CW-1018
CW-1021
CW-1014
CW-1013
CW-1016
CW-1008
CW-1015
CW-1017
CW-1007
CW-1020
CW-1019
CW-1005
CW-1004
CW-1009
CW-1010
CW-1011
CW-1010
CW-1003
CW-1001
FWD
FRONT SIDE (VIEW LOOKING AFT)

## CENTER WING TANK - BL 0.00 RIB

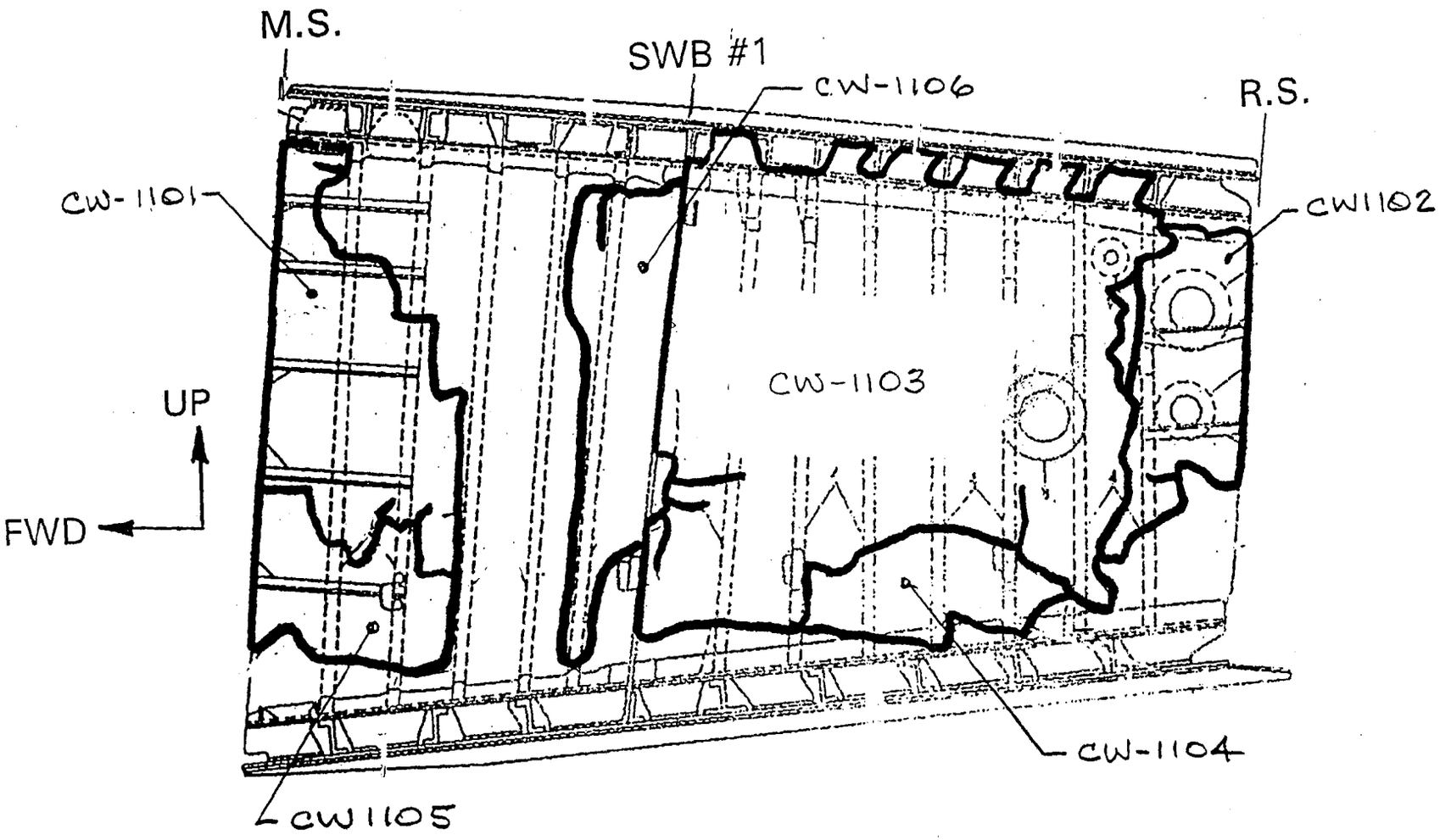


LEFT SIDE (VIEW LOOKING RIGHT)