APPENDIX A

SECTION A5 (EMPENNAGE)

HORIZONTAL STABILIZER LEFT HAND SIDE

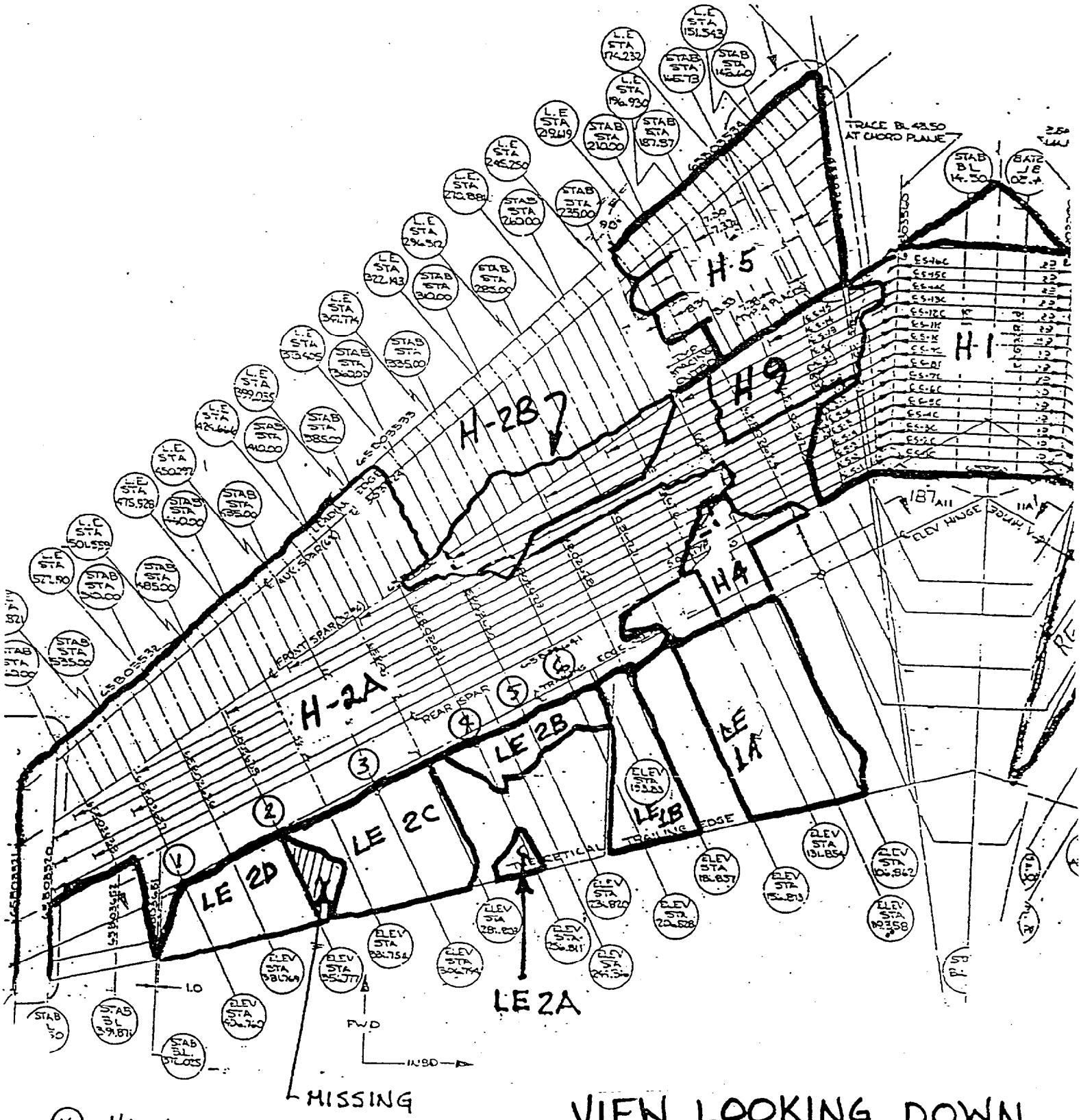

(X) = HINGE NO.

VIEW LOOKING DOWN

HORIZONTAL STABILIZER - RIGHT HAND SIDE

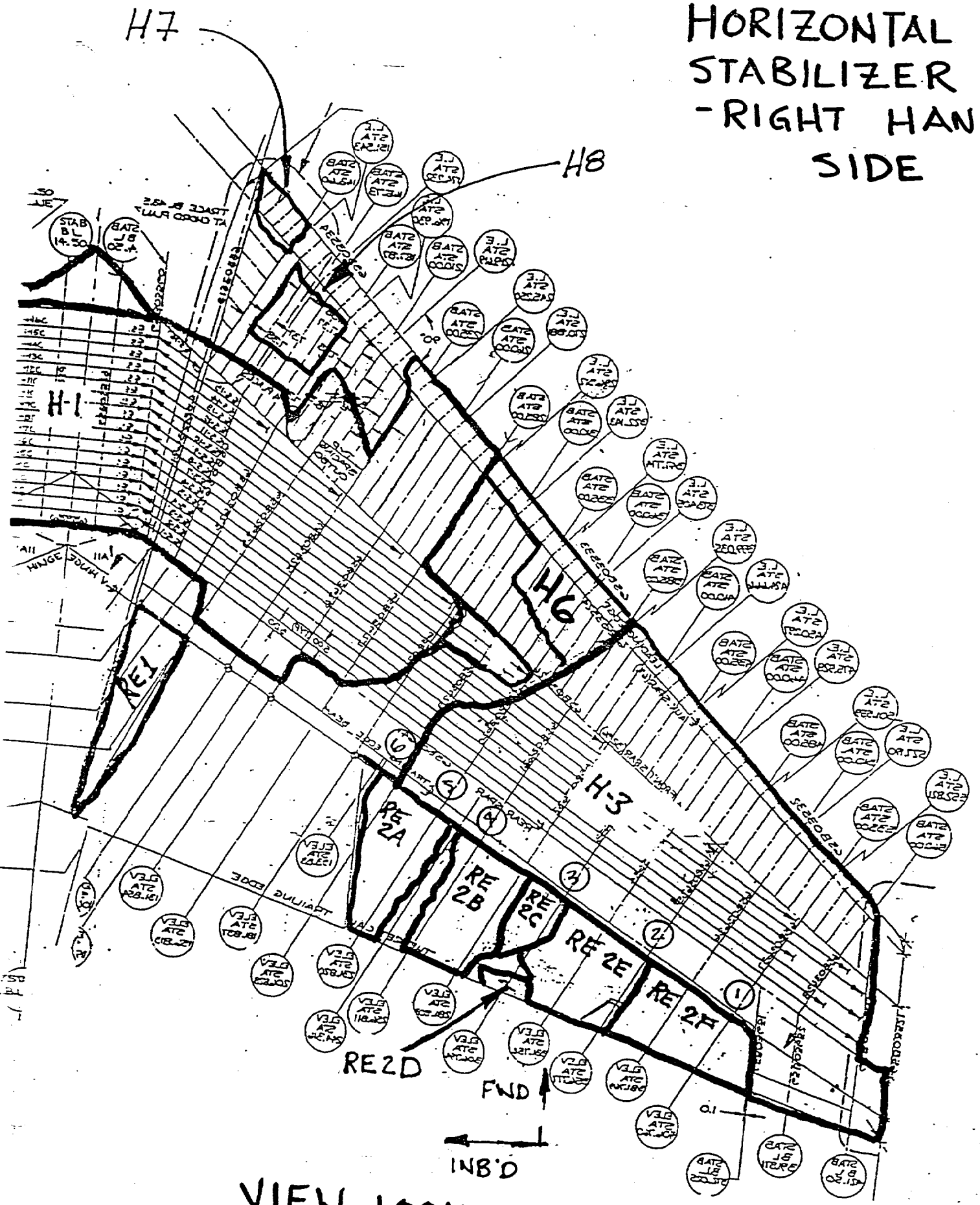

VIEW LOOKING DOWN

(X) = HINGE NO.

VERTICAL STABILIZER AND RUDDER

V1	L & RHS
V2	L & RHS
V3A	LHS
V3B	RHS
V3C	RHS
V3D	RHS
V3E	RHS
V4	LHS
V5	LHS
V6	LHS
V7	DORSAL FIN
V3	RHS
V9	RHS
V10	LHS

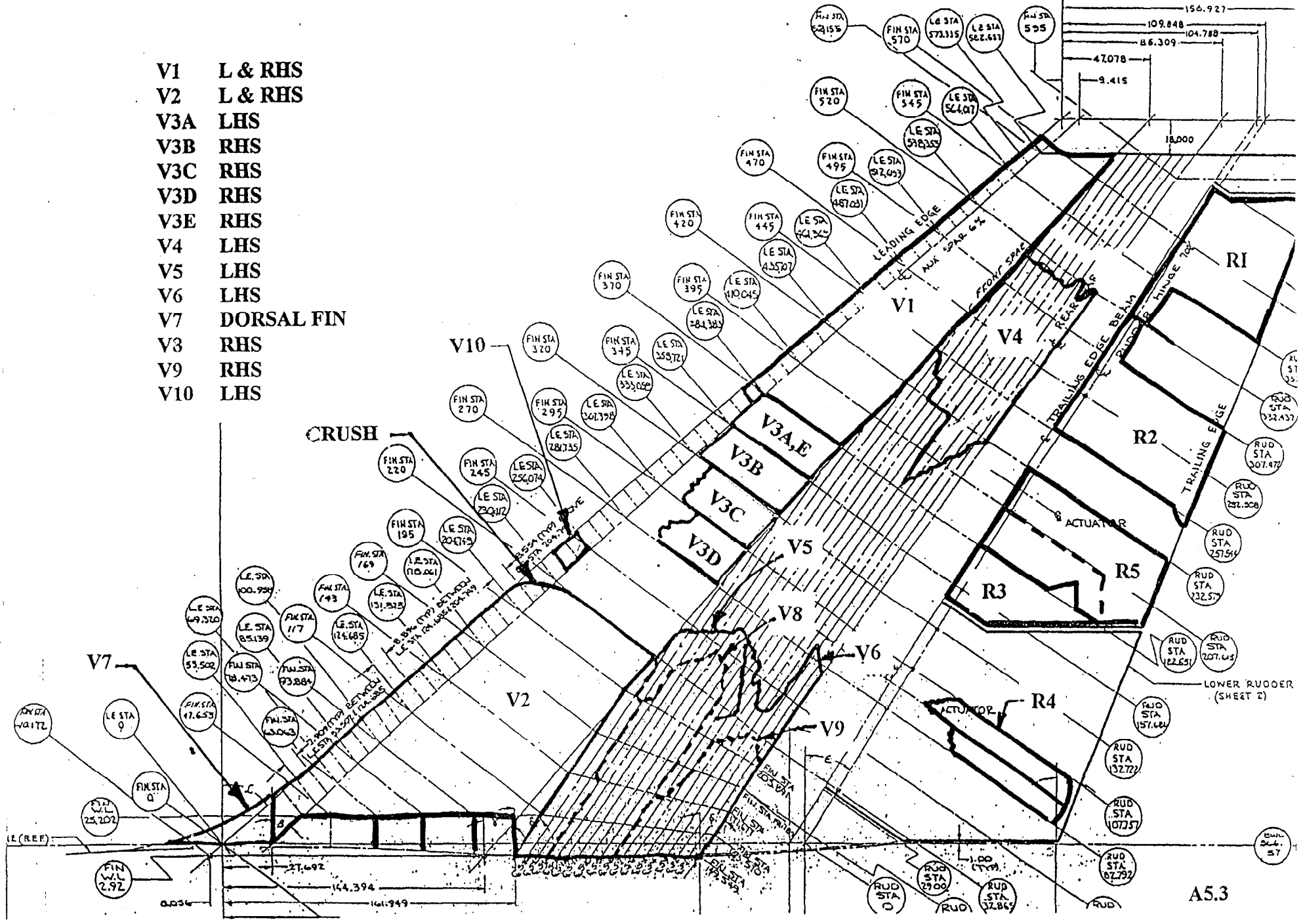

A5.3

Fin/Body Attachment

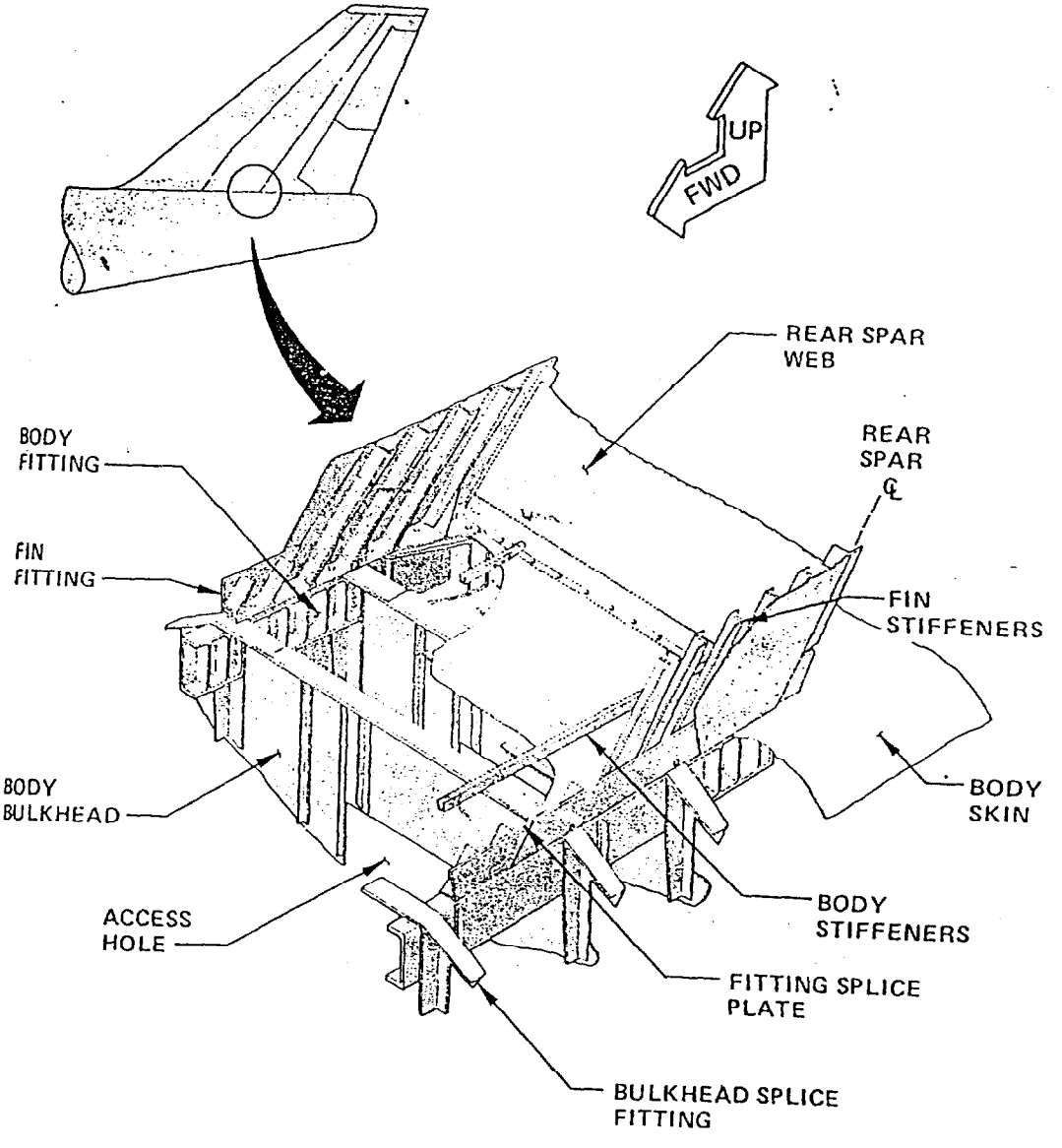

Strut-to-Wing Connections FUSE BOLTS

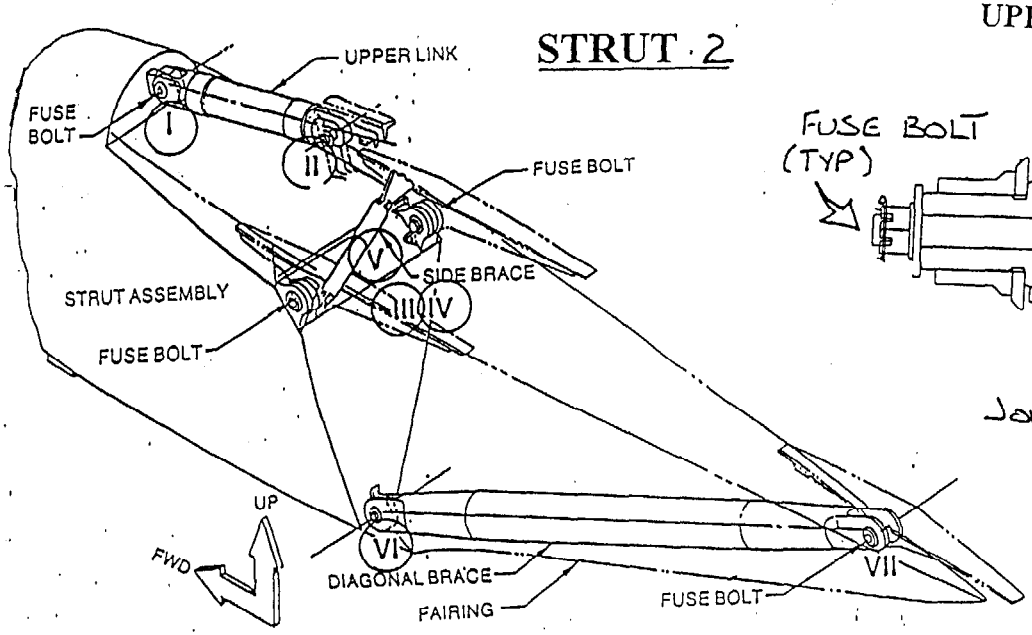

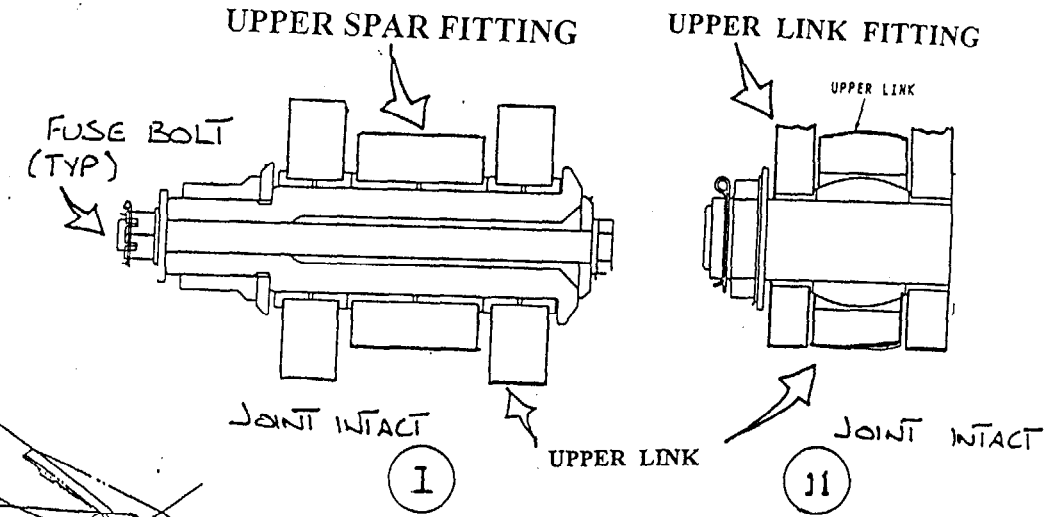

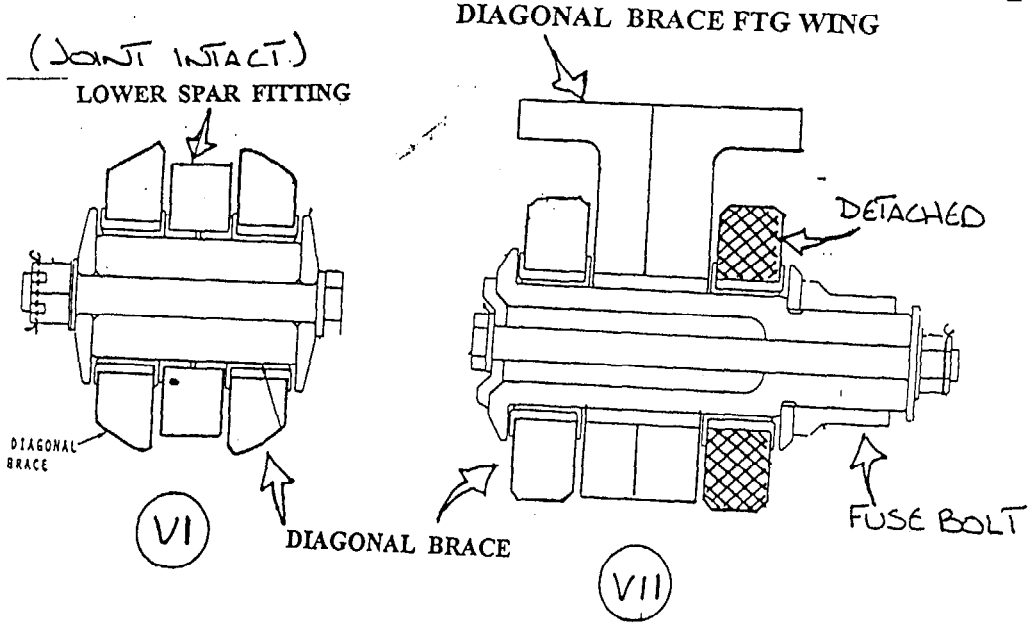

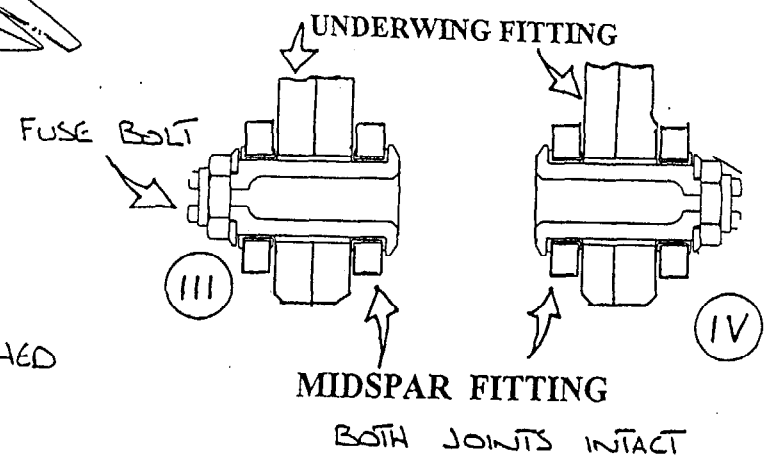

ATTACHED TO FUSE BOLT

DETACHED FROM FUSE BOLT

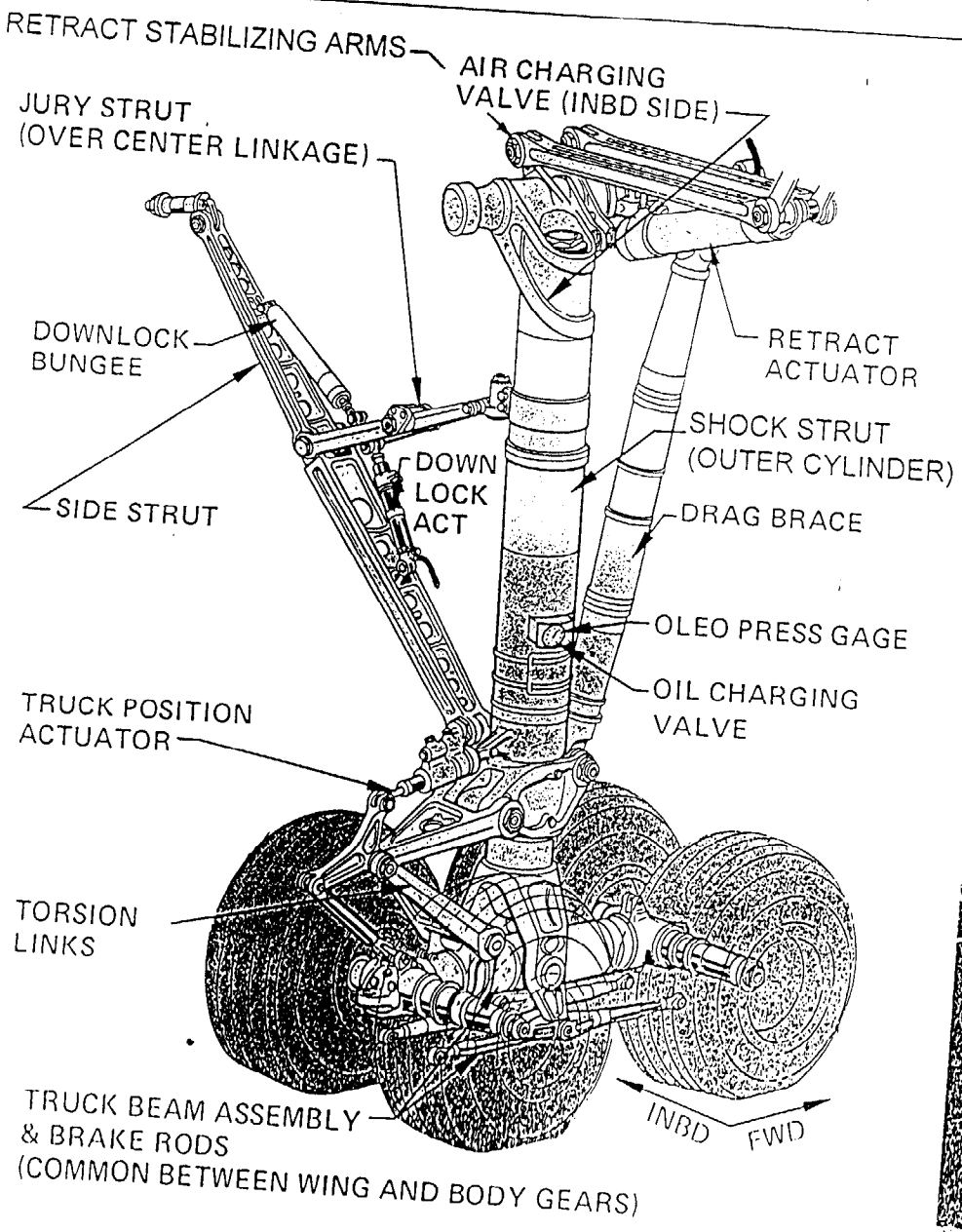
RETRACT STABILIZING ARMS
AIR CHARGING VALVE (INBD SIDE)
JURY STRUT (OVER CENTER LINKAGE)
DOWNLOCK BUNGEE
RETRACT ACTUATOR
SHOCK STRUT (OUTER CYLINDER)
DOWN LOCK ACT
SIDE STRUT
DRAG BRACE
OLEO PRESS GAGE
OIL CHARGING VALVE
TRUCK POSITION ACTUATOR
TORSION LINKS
TRUCK BEAM ASSEMBLY & BRAKE RODS (COMMON BETWEEN WING AND BODY GEARS)
INBD
FWD

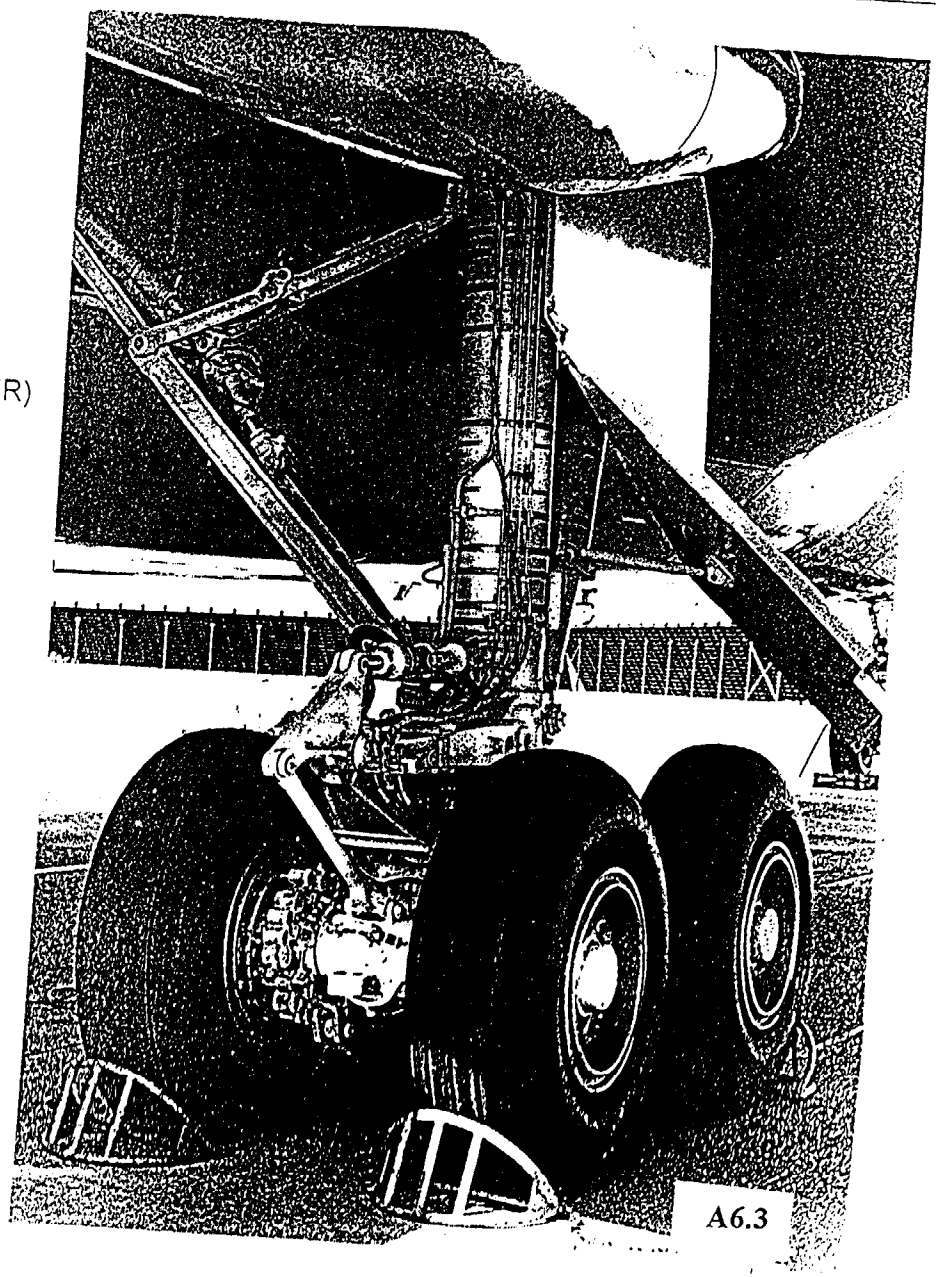

A6.3

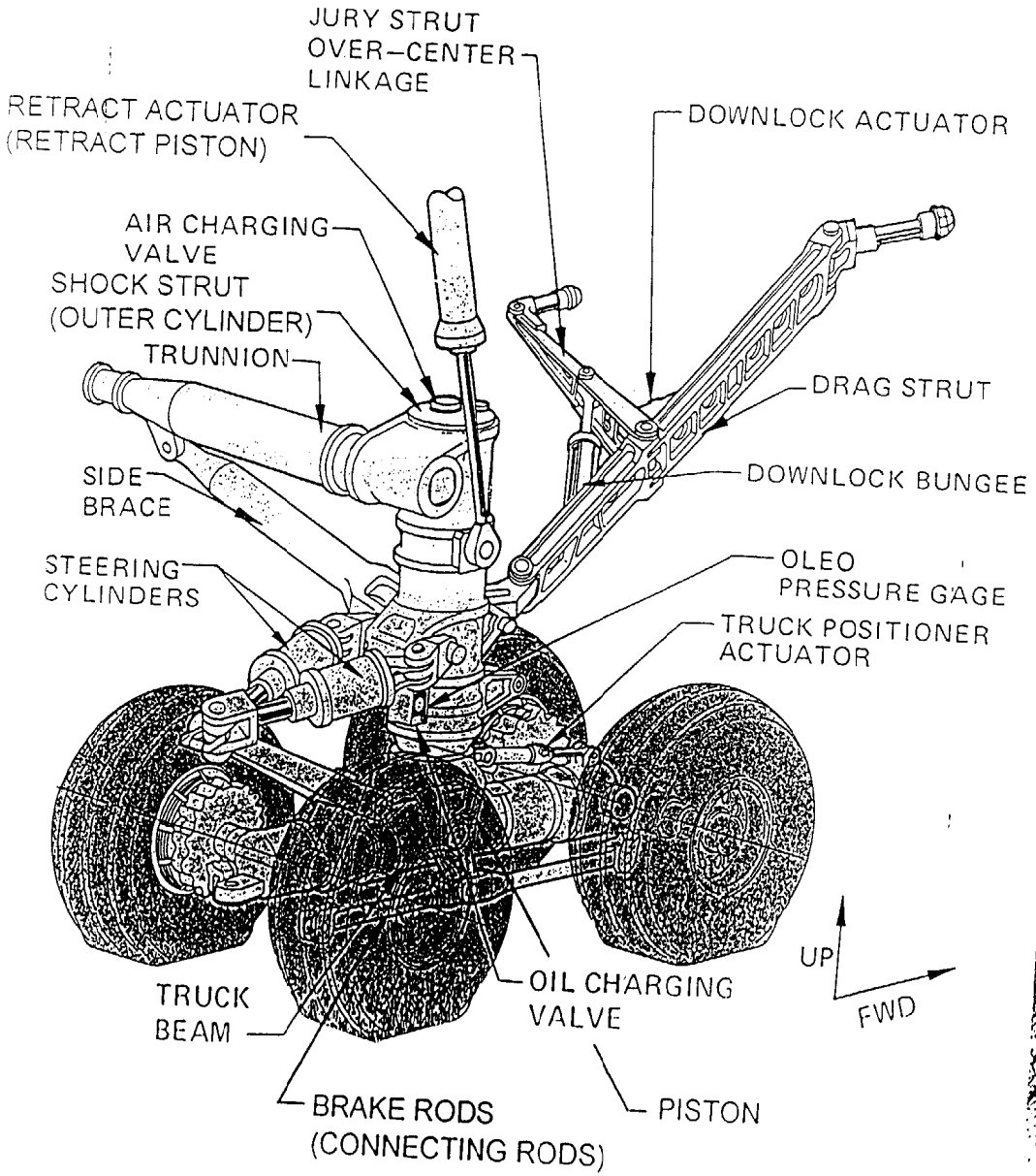
JURY STRUT
OVER–CENTER
LINKAGE
RETRACT ACTUATOR
(RETRACT PISTON)
DOWNLOCK ACTUATOR
AIR CHARGING
VALVE
SHOCK STRUT
(OUTER CYLINDER)
TRUNNION
DRAG STRUT
SIDE
BRACE
DOWNLOCK BUNGEE
STEERING
CYLINDERS
OLEO
PRESSURE GAGE
TRUCK POSITIONER
ACTUATOR
UP
FWD
TRUCK
BEAM
OIL CHARGING
VALVE
BRAKE RODS
(CONNECTING RODS)
PISTON

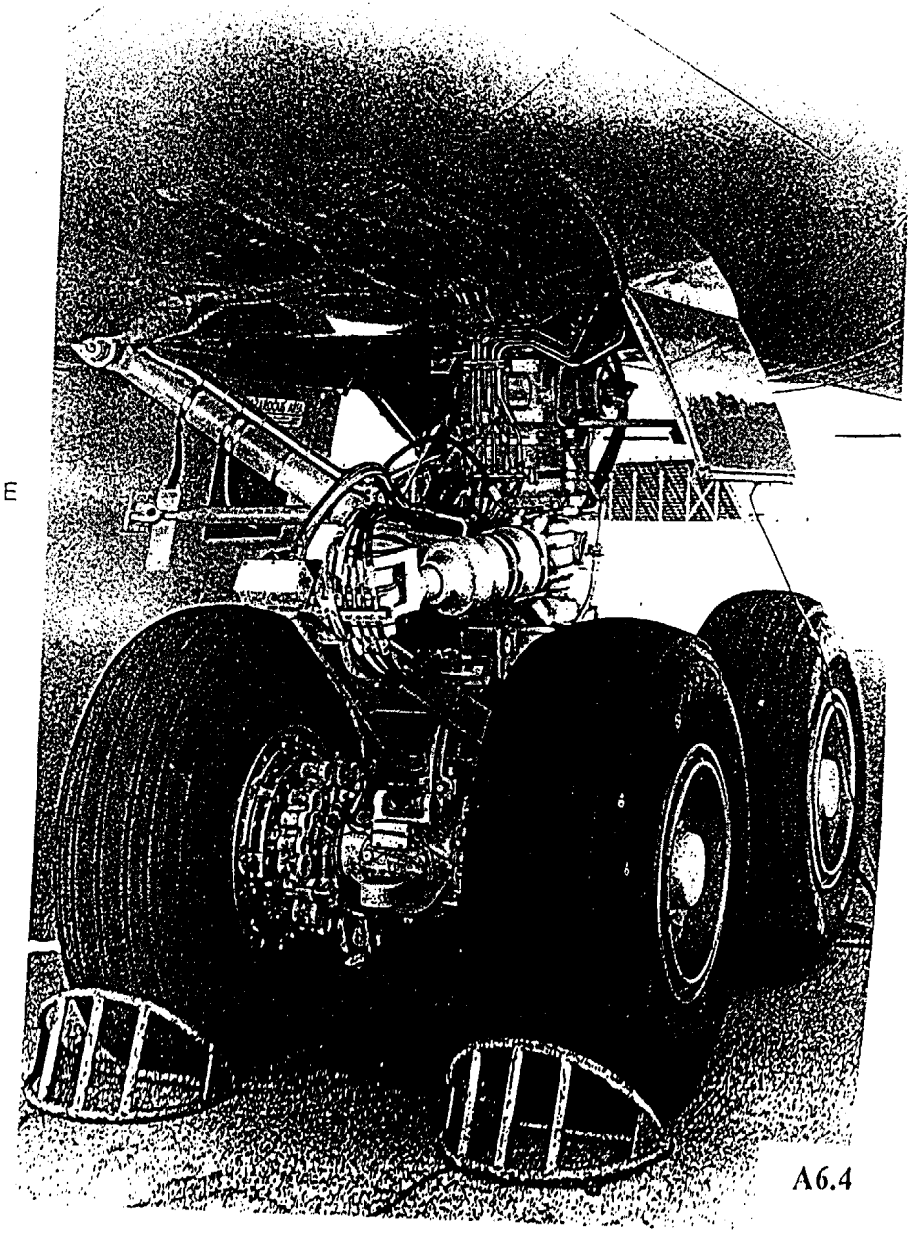

A6.4

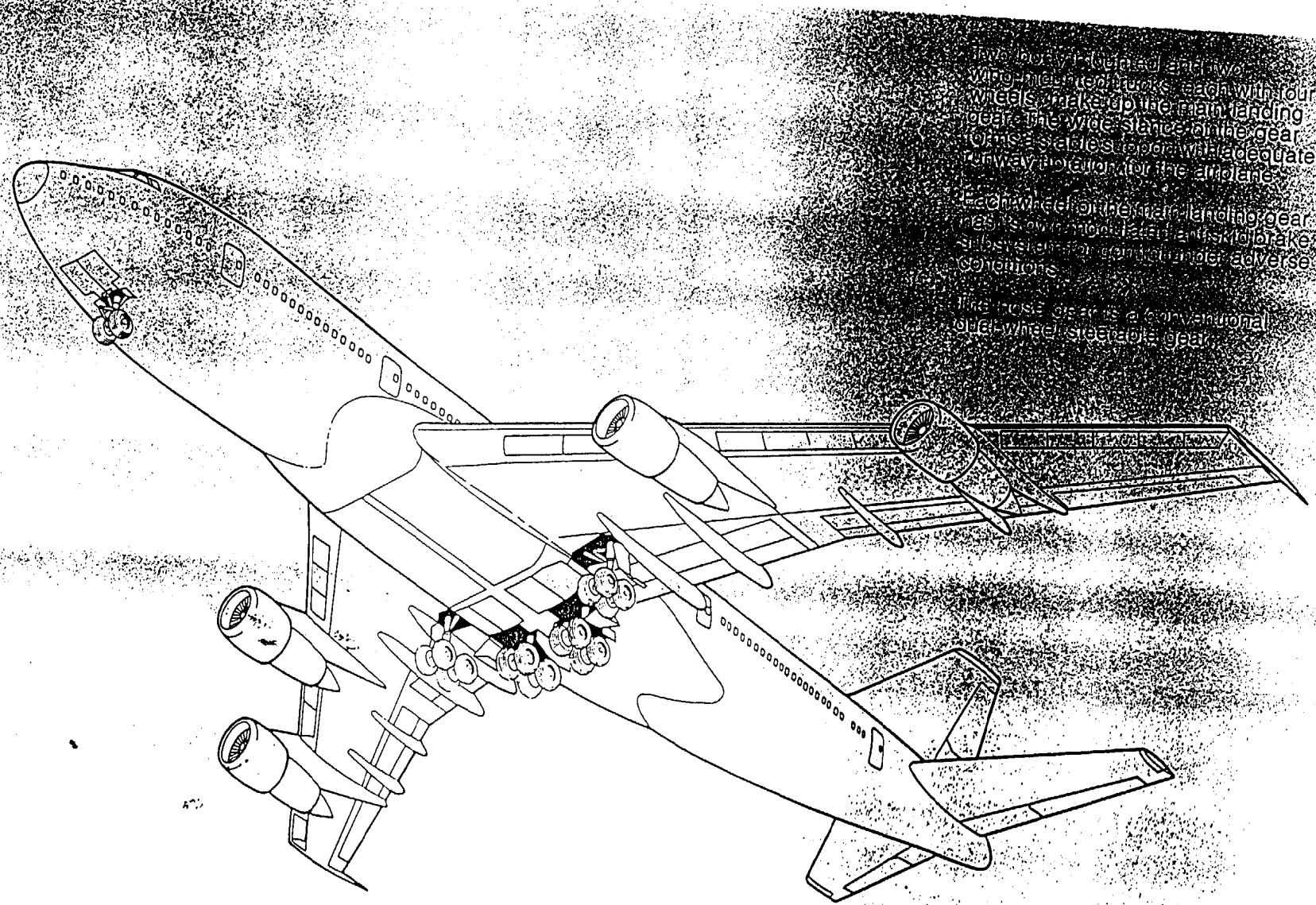

Two body-mounted and two wing-mounted trucks, each with four wheels, make up the main landing gear. The wide stance of the gear forms a stable support with adequate runway flotation for the airplane.

Each wheel of the main landing gear has its own modulated antiskid brake subsystem for control under adverse conditions.

The nose gear is a conventional dual-wheel steerable gear.

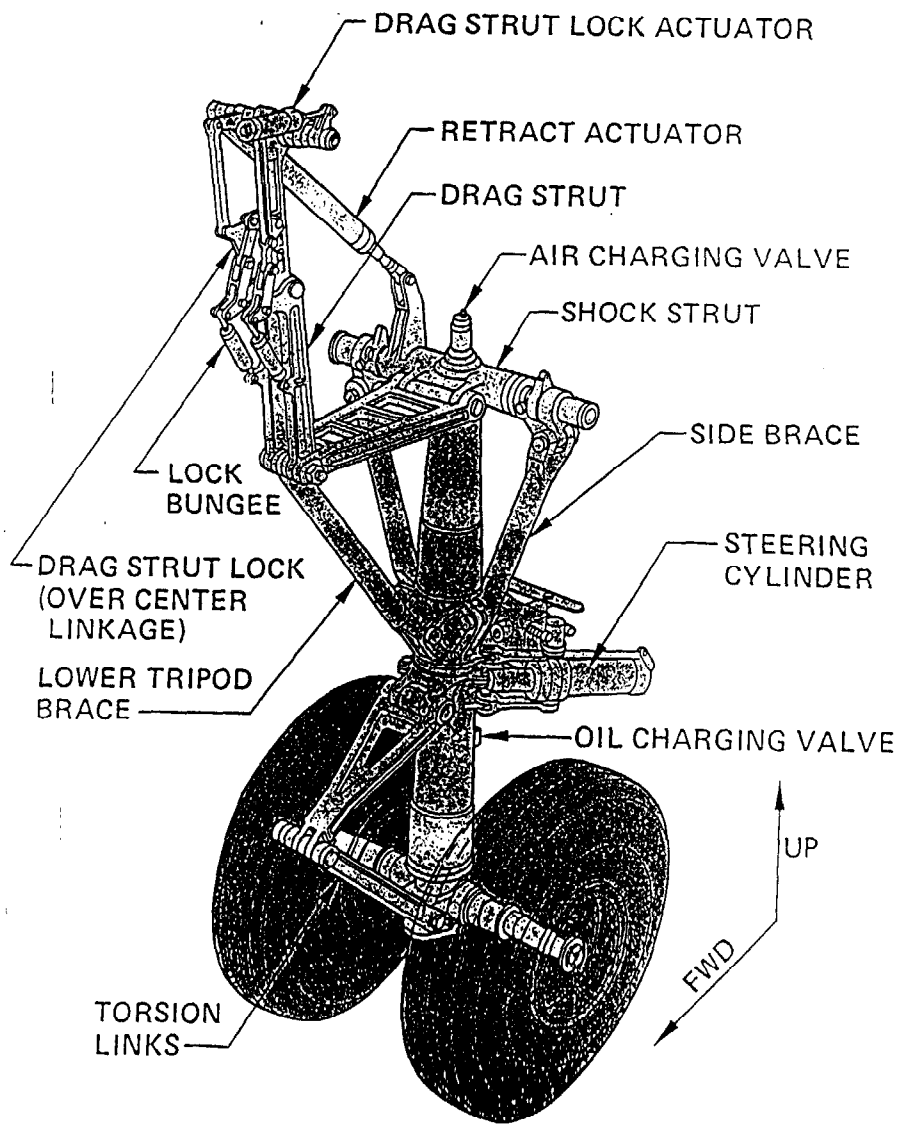
DRAG STRUT LOCK ACTUATOR
RETRACT ACTUATOR
DRAG STRUT
AIR CHARGING VALVE
SHOCK STRUT
SIDE BRACE
LOCK BUNGEE
STEERING CYLINDER
DRAG STRUT LOCK (OVER CENTER LINKAGE)
LOWER TRIPOD BRACE
OIL CHARGING VALVE
UP
FWD
TORSION LINKS

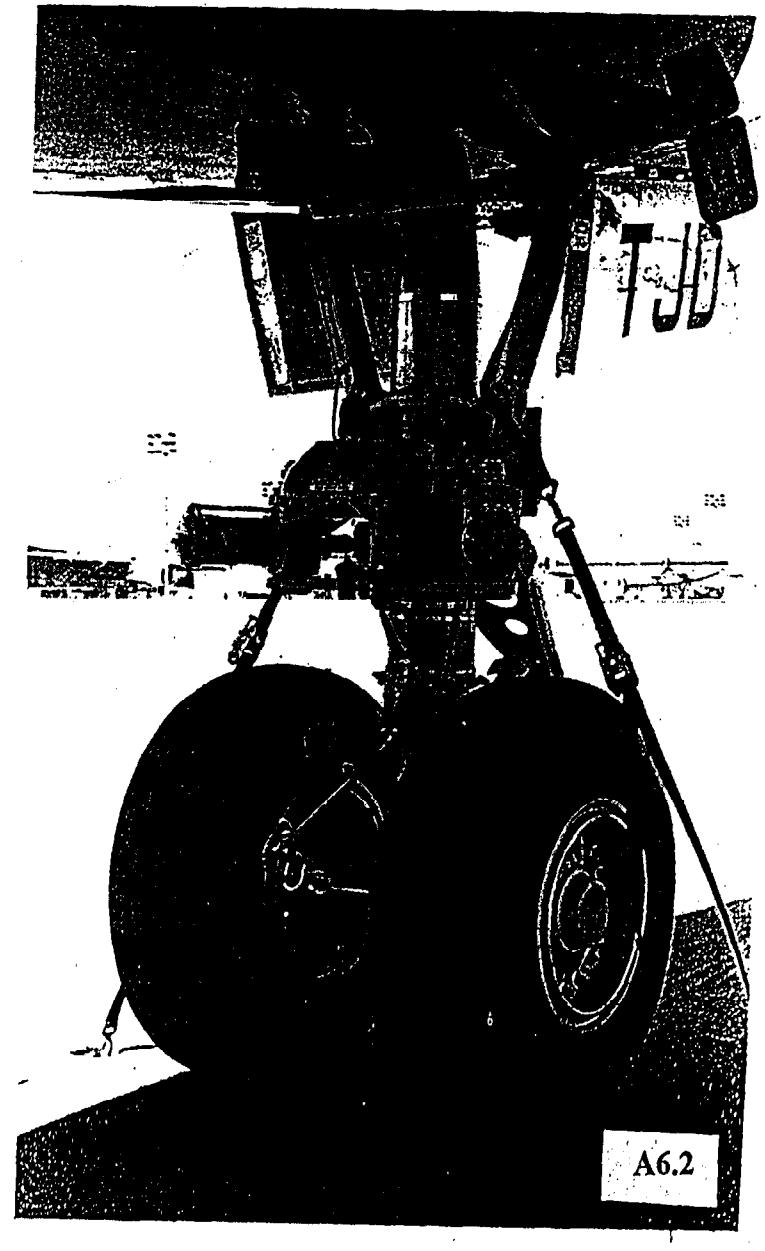
A6.2