APPENDIX A

SECTION A6 (LANDING GEAR AND LANDING GEAR DOOR ASSEMBLIES)

Typical Main Gear Tire/Wheel Brake Installation

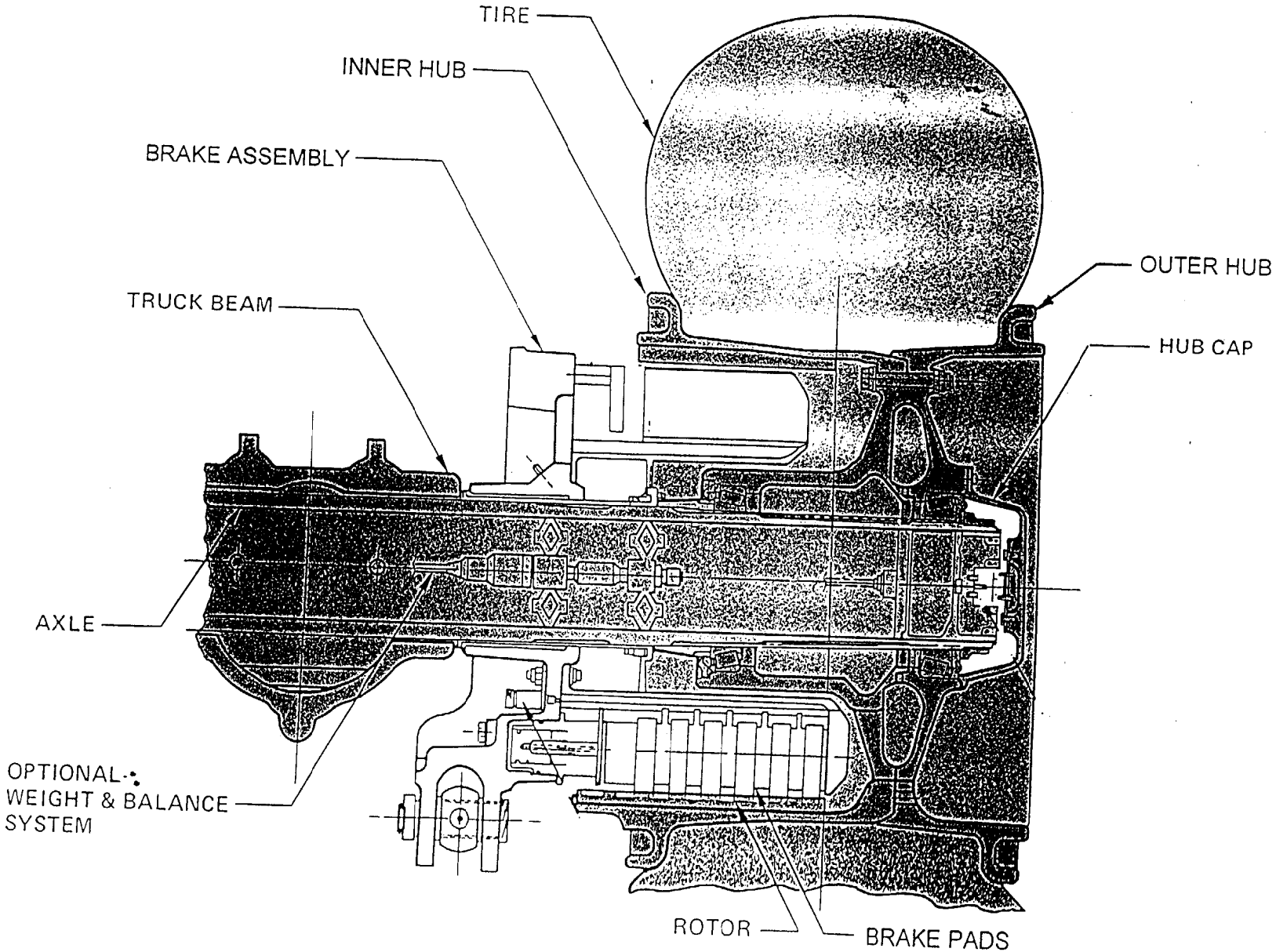

Nose Gear Doors

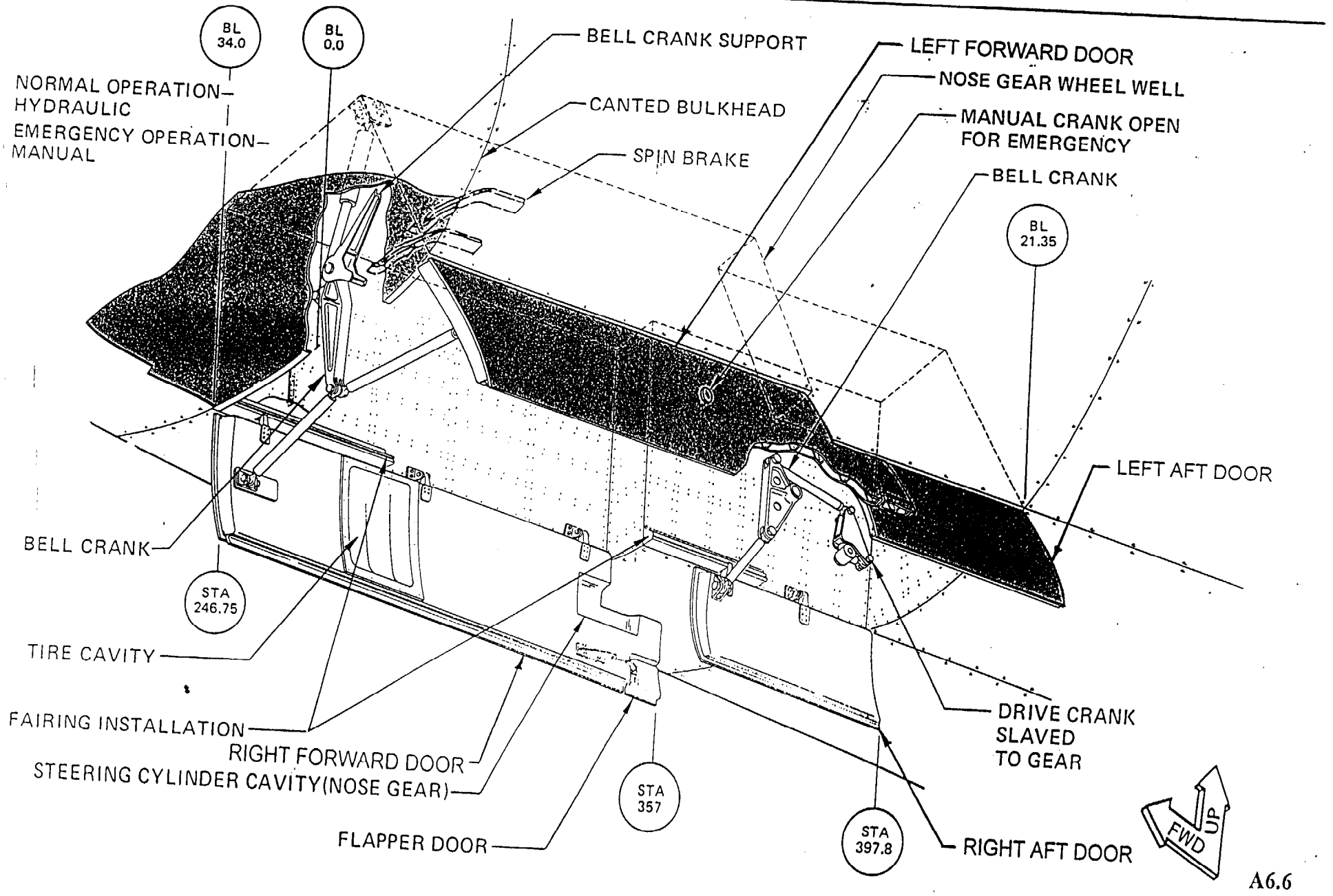

Wing Main Landing Gear Door Detail

NOTE: DOOR SLAVED TO GEAR

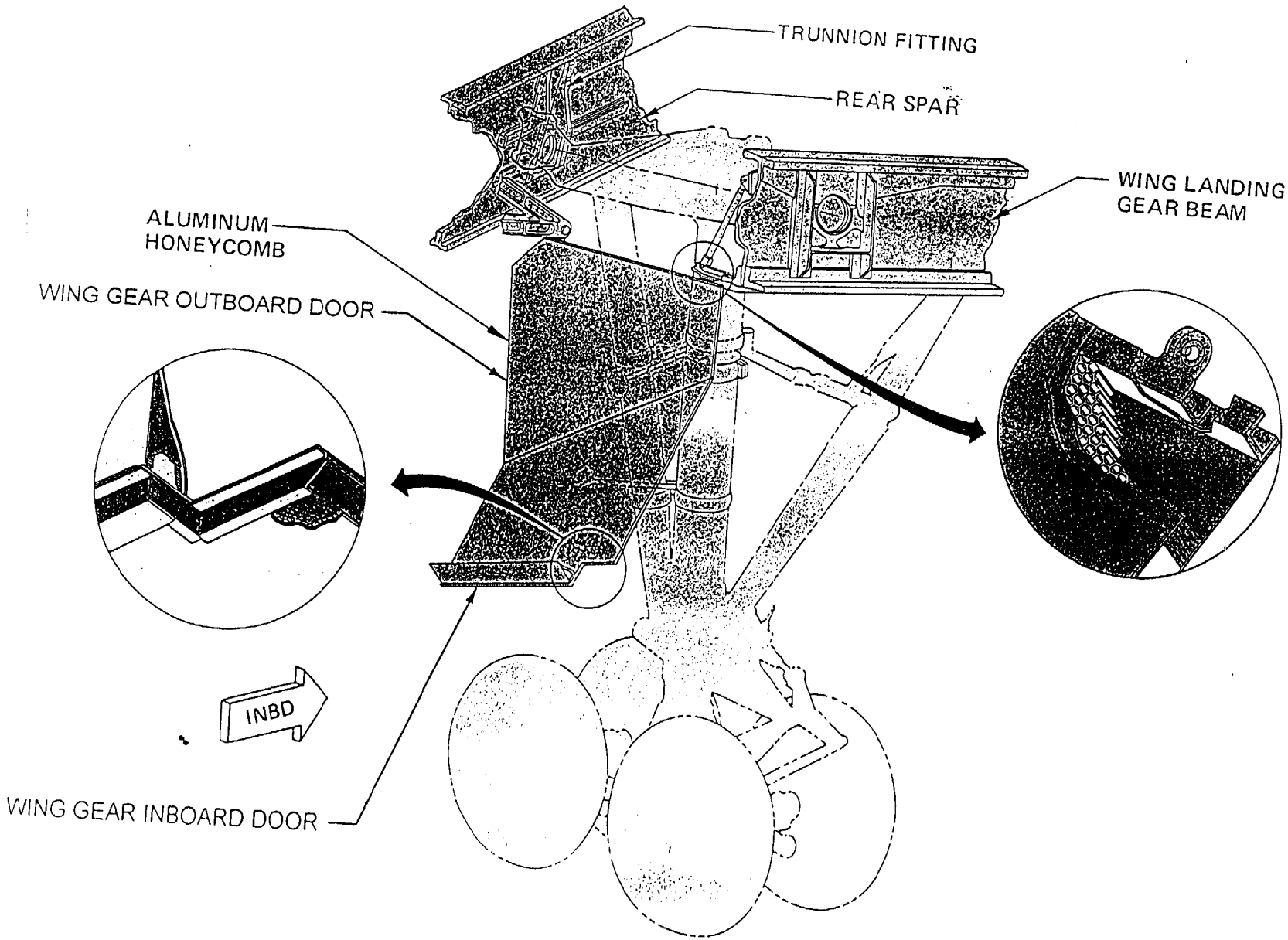

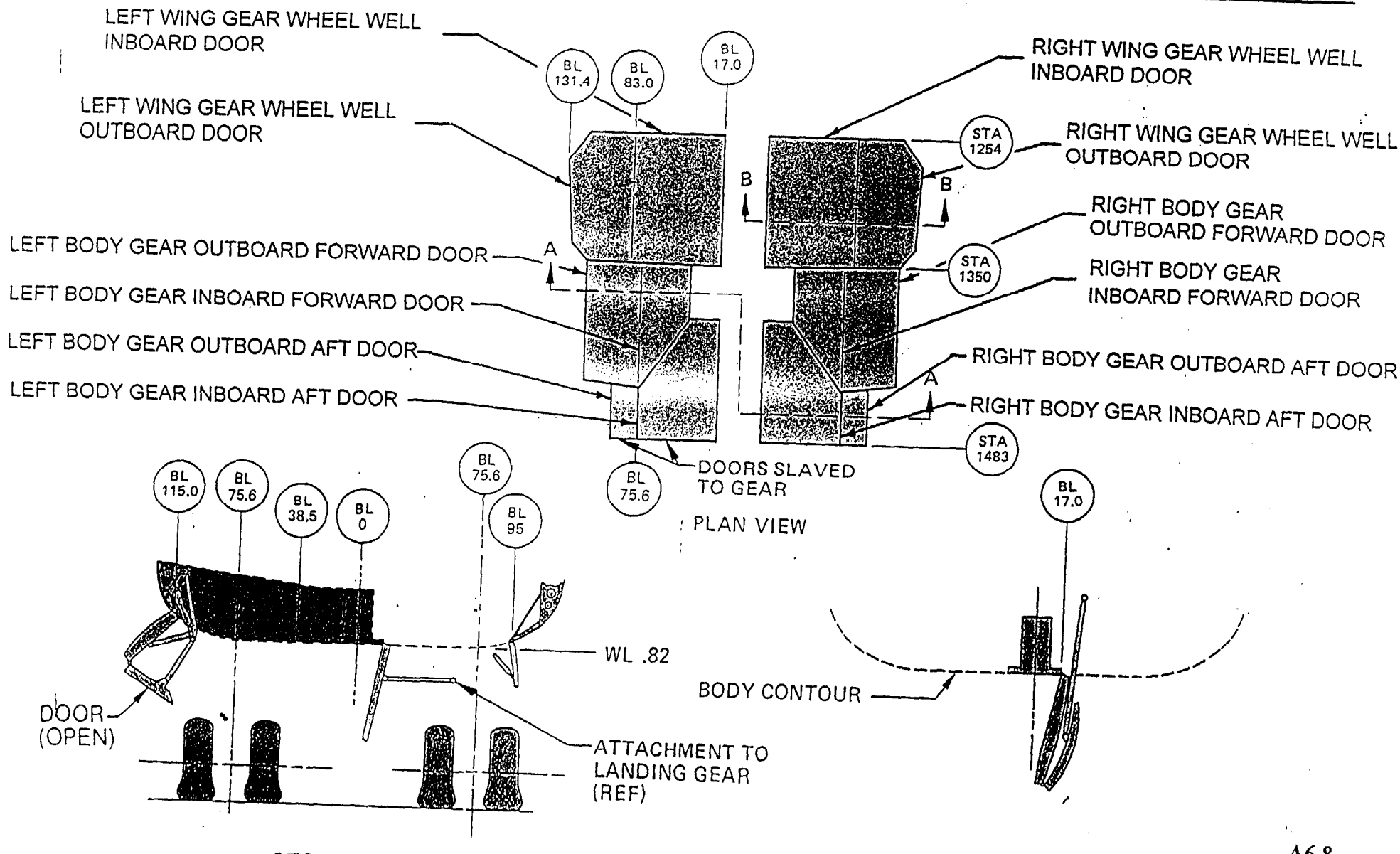
LEFT WING GEAR WHEEL WELL INBOARD DOOR
LEFT WING GEAR WHEEL WELL OUTBOARD DOOR
LEFT BODY GEAR OUTBOARD FORWARD DOOR
LEFT BODY GEAR INBOARD FORWARD DOOR
LEFT BODY GEAR OUTBOARD AFT DOOR
LEFT BODY GEAR INBOARD AFT DOOR
BL 131.4
BL 83.0
BL 17.0
BL 75.6
STA 1254
STA 1350
STA 1483
A
B
DOORS SLAVED TO GEAR
PLAN VIEW
RIGHT WING GEAR WHEEL WELL INBOARD DOOR
RIGHT WING GEAR WHEEL WELL OUTBOARD DOOR
RIGHT BODY GEAR OUTBOARD FORWARD DOOR
RIGHT BODY GEAR INBOARD FORWARD DOOR
RIGHT BODY GEAR OUTBOARD AFT DOOR
RIGHT BODY GEAR INBOARD AFT DOOR
BL 115.0
BL 75.6
BL 38.5
BL 0
BL 95
WL .82
DOOR (OPEN)
ATTACHMENT TO LANDING GEAR (REF)
SECTION A-A
BODY CONTOUR
SECTION B - B