APPENDIX A

SECTION A7 (ENGINE STRUTS

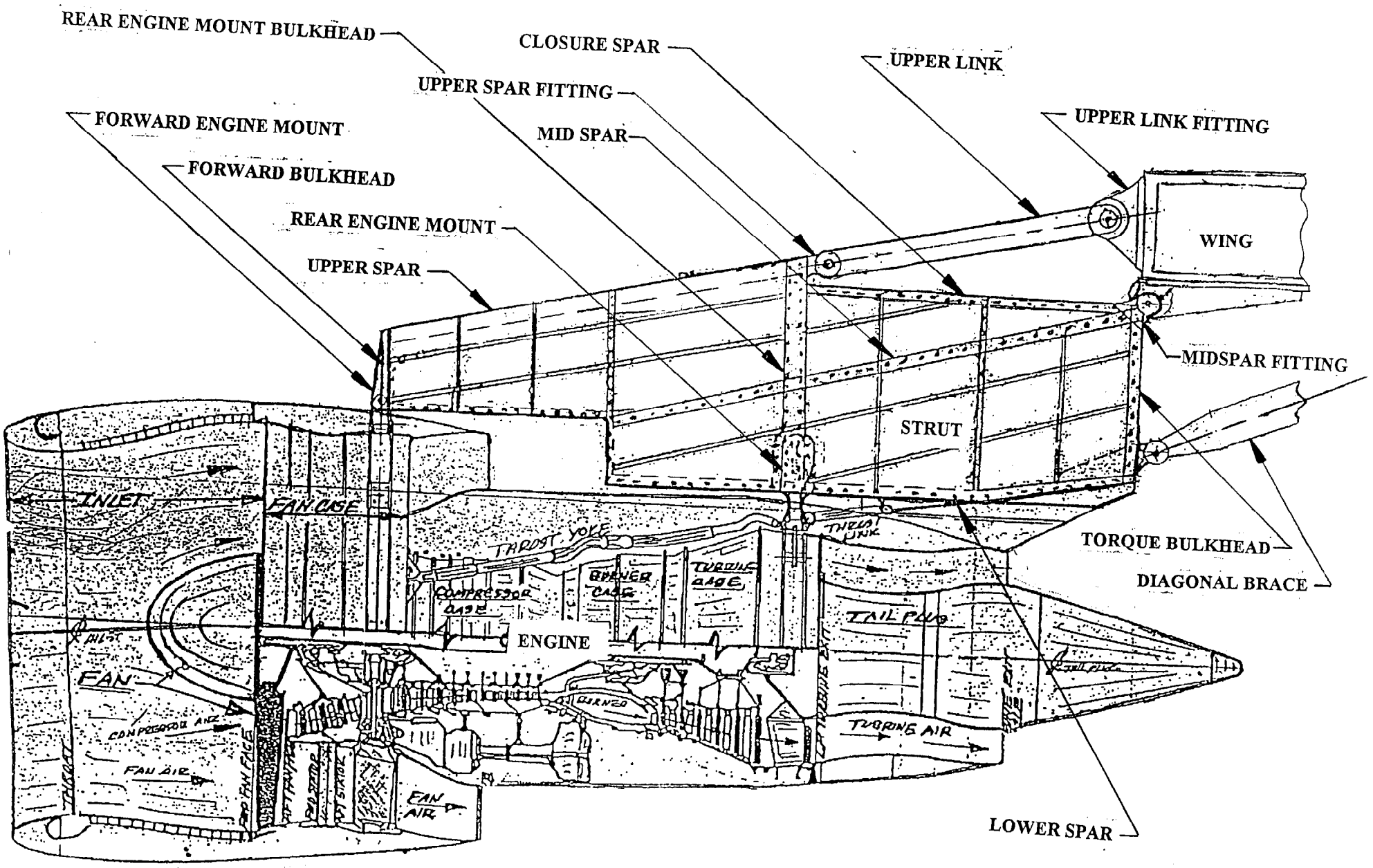

STRUT ASSEMBLY DIAGRAM

Strut-to-Wing Connections

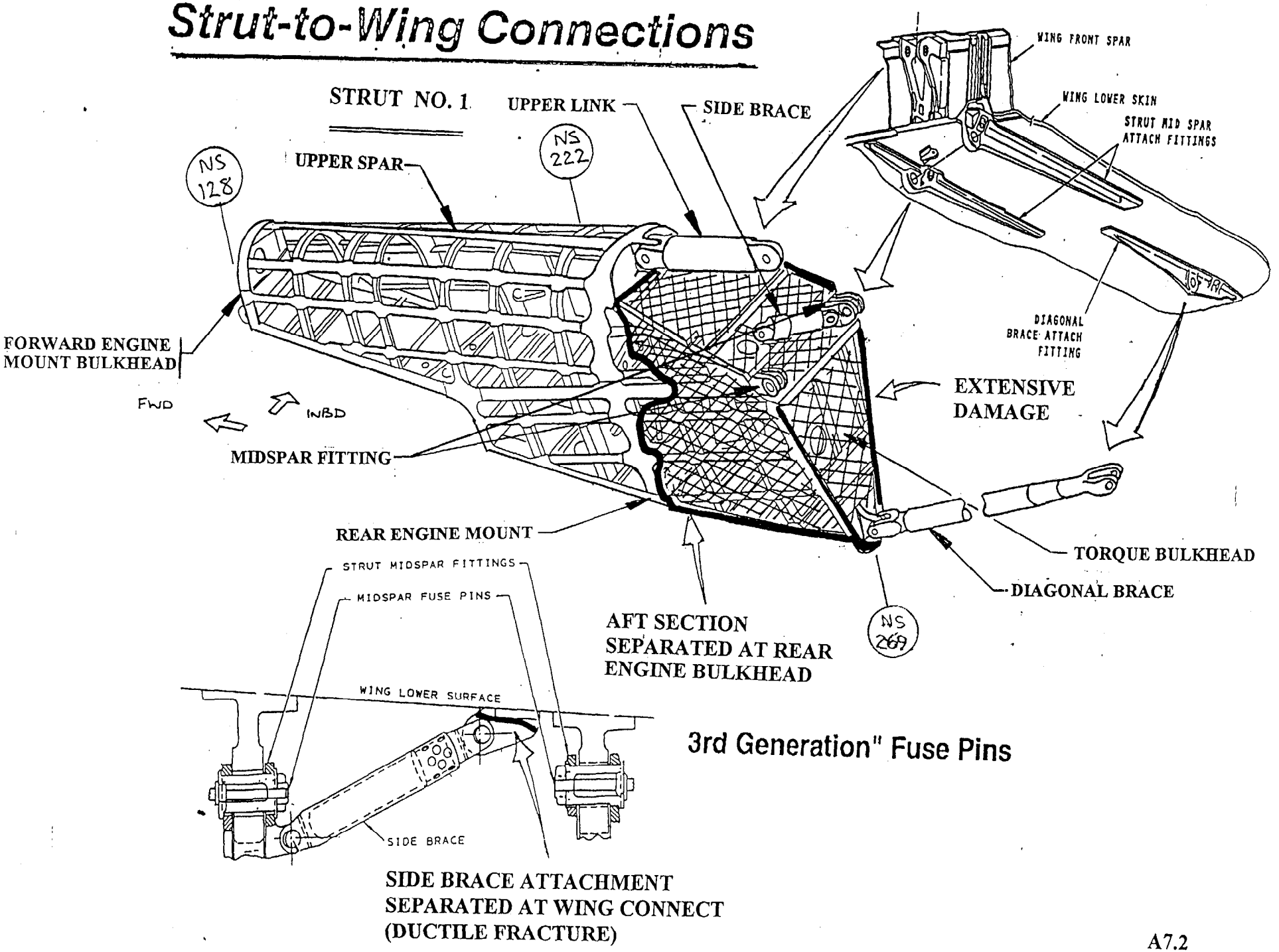

3rd Generation" Fuse Pins

STRUT-TO-WING CONNECTIONS STRUT NO. 1

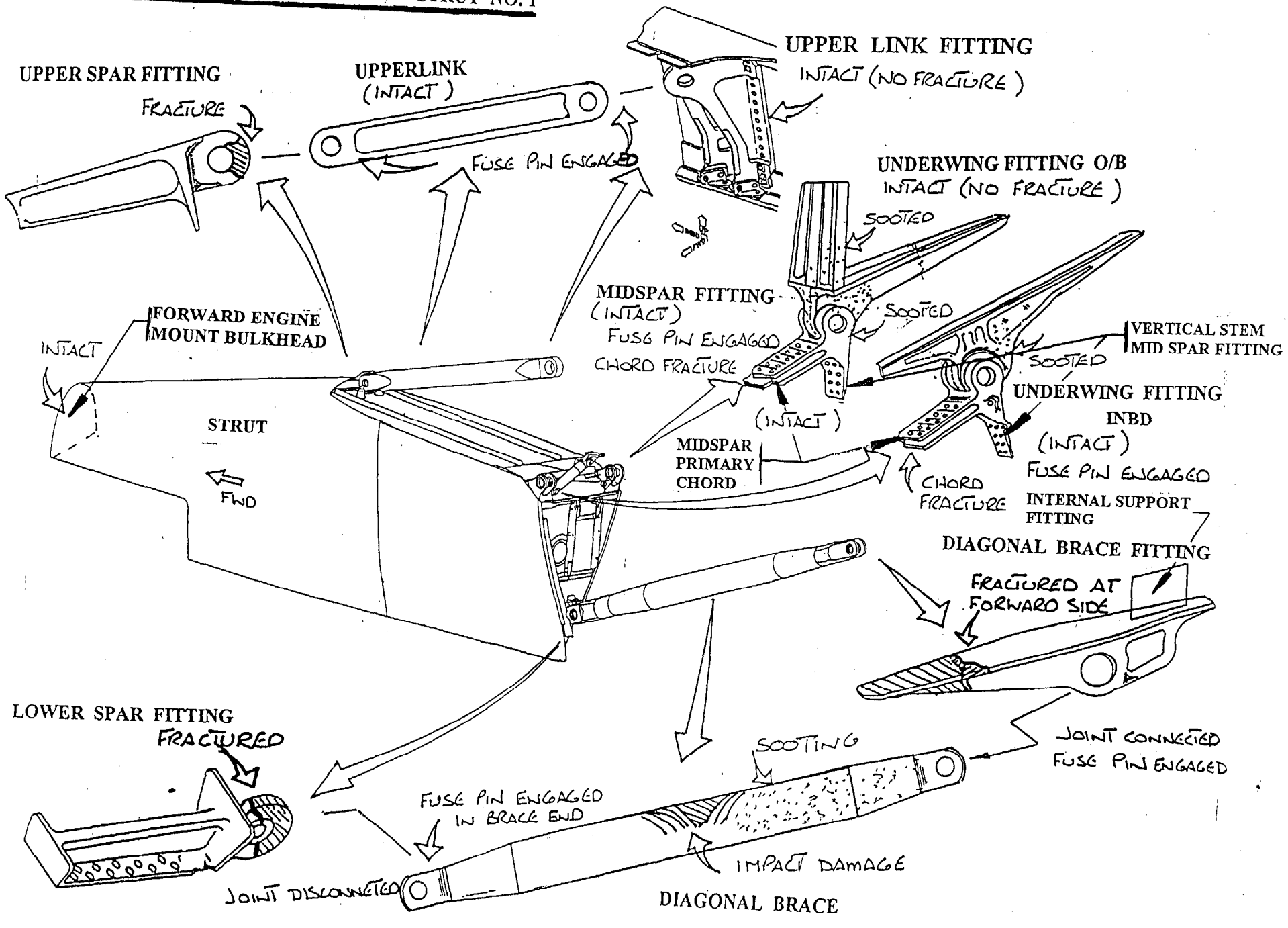

ENGINE TO STRUT ATTACHMENT

STRUT NO. 1

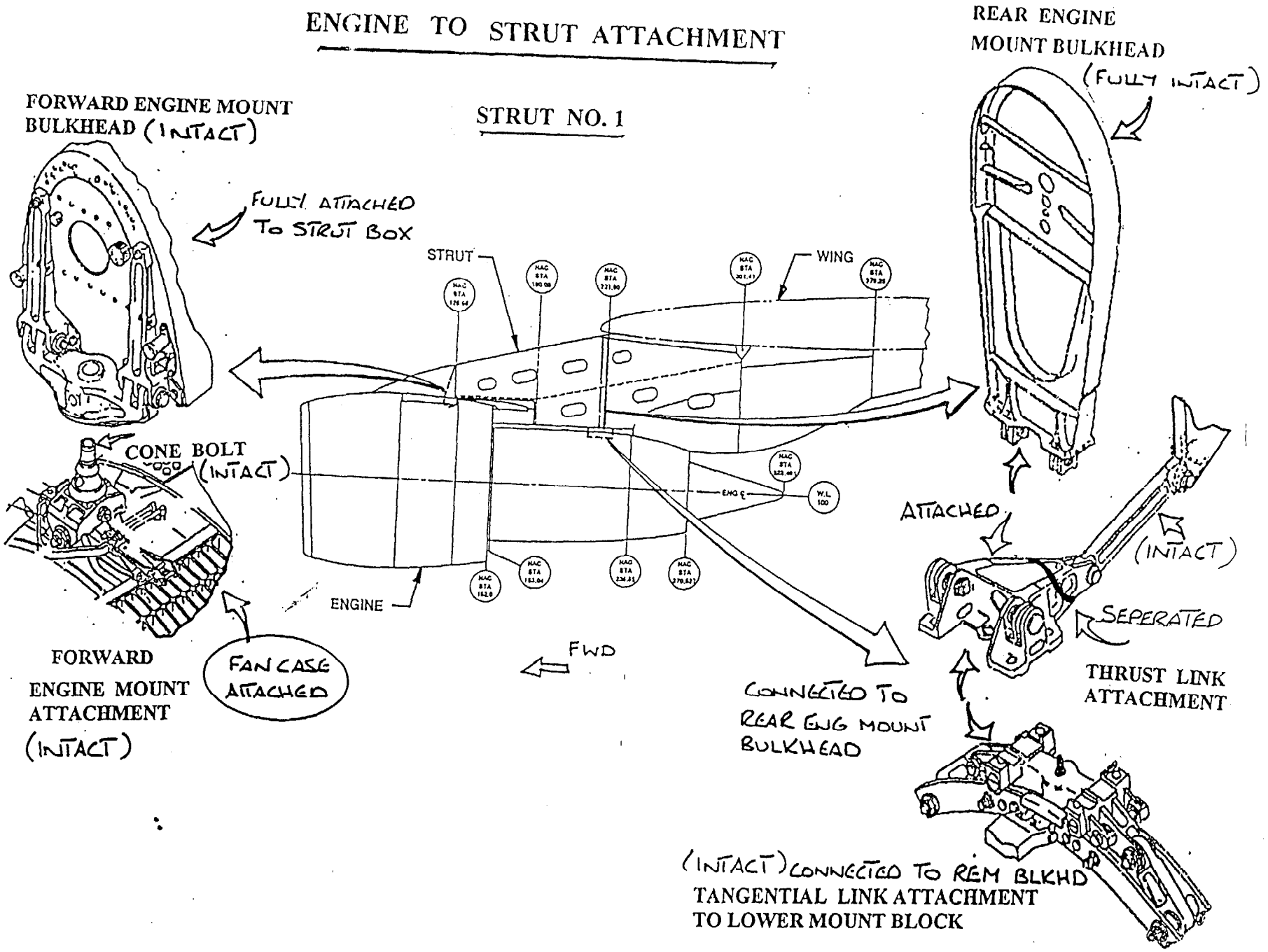

Strut-to-Wing Connections FUSE BOLT

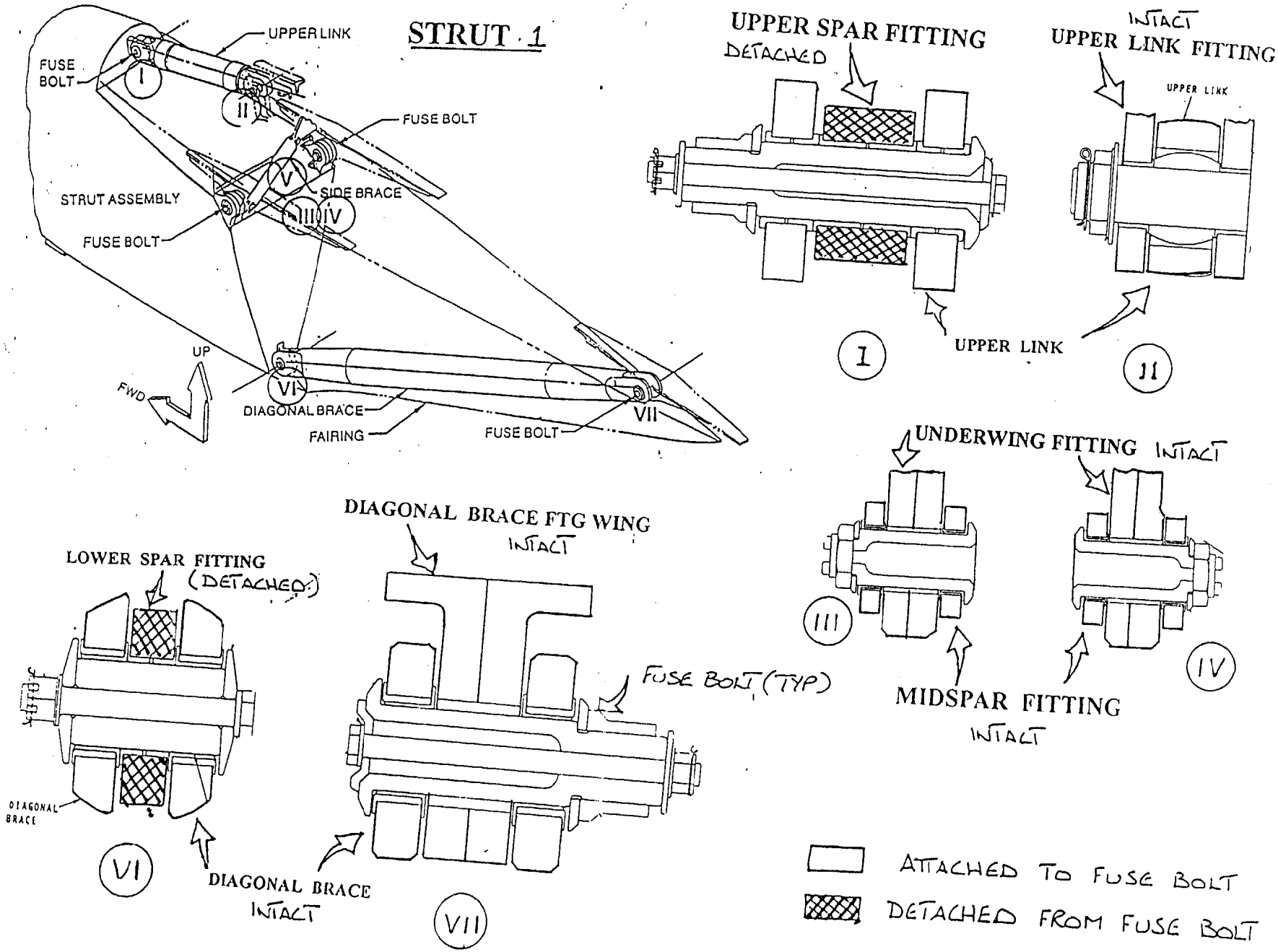

STRUT - TO - WING CONNECTIONS

STRUT No. 2

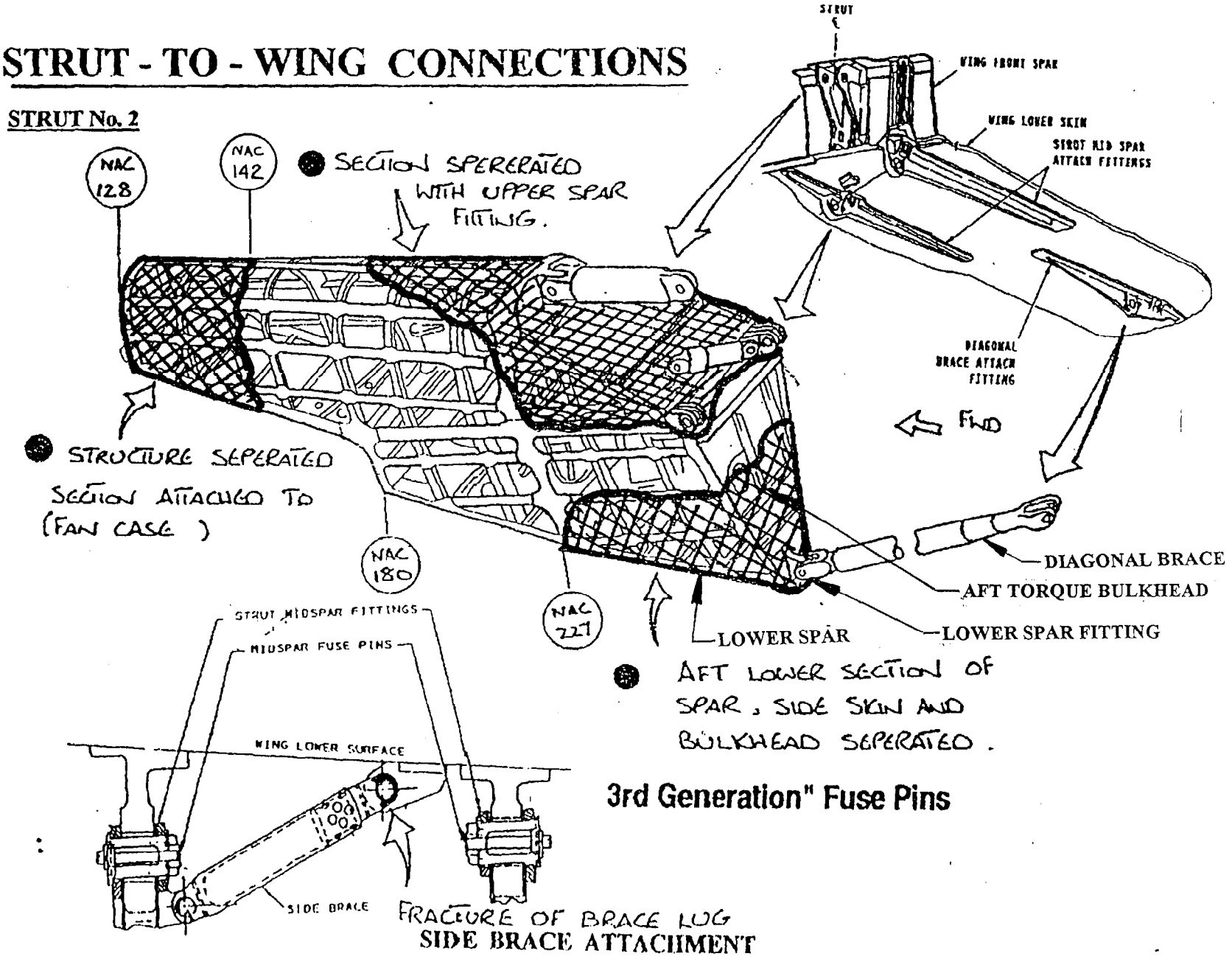

3rd Generation" Fuse Pins

SIDE BRACE ATTACHMENT

STRUT-TO-WING CONNECTIONS STRUT NO. 2

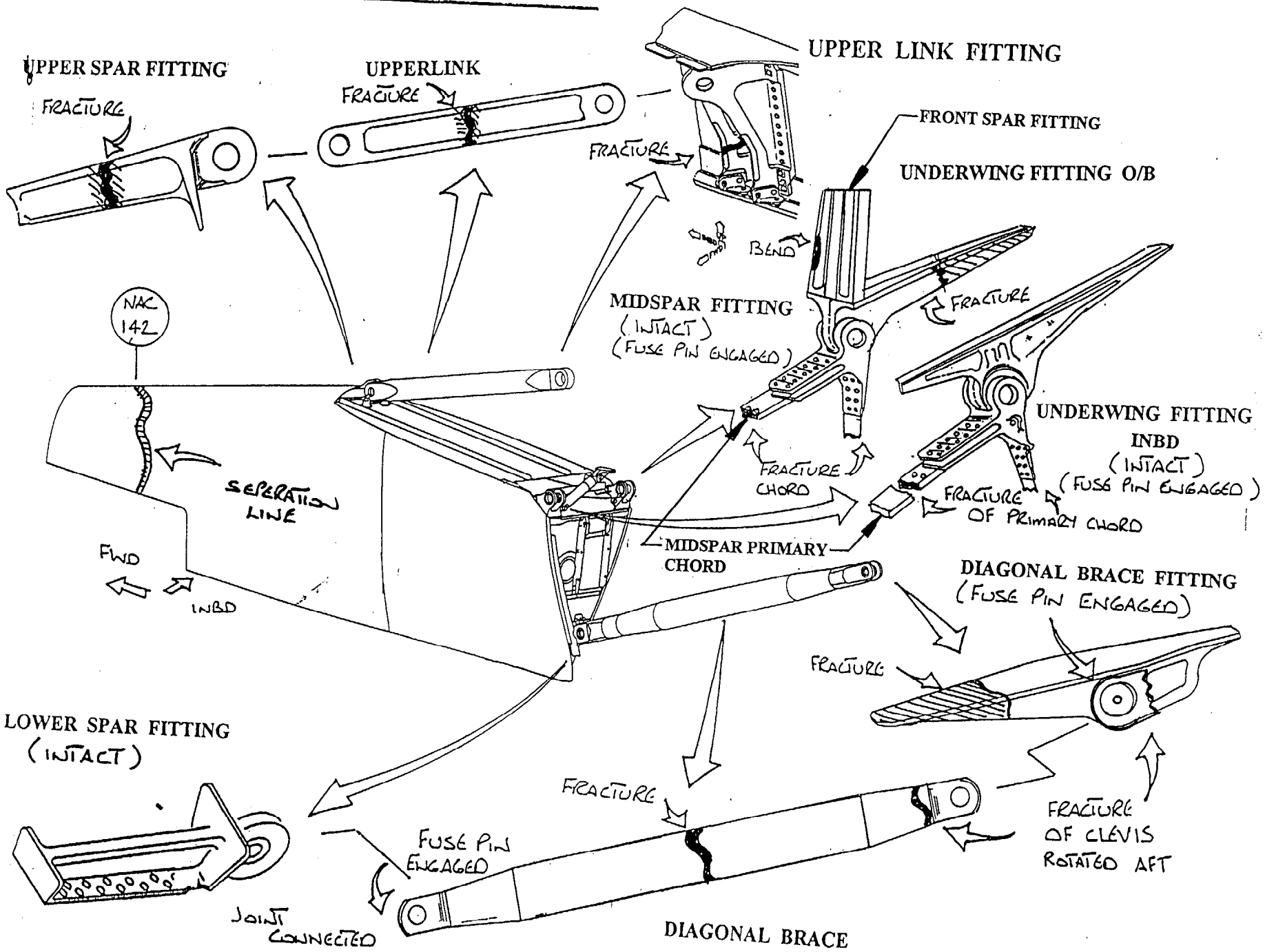

ENGINE TO STRUT ATTACHMENT

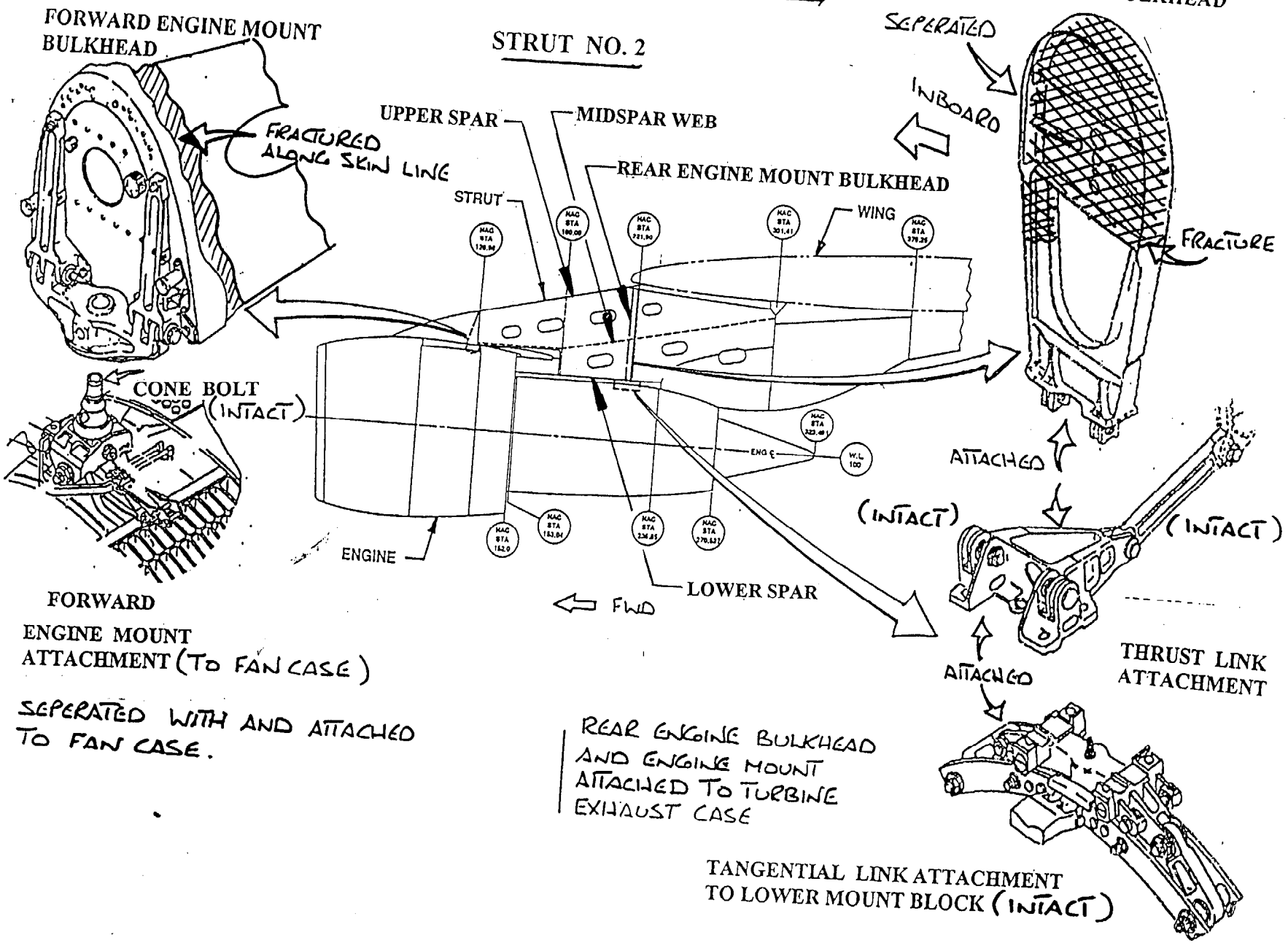

STRUT - TO - WING CONNECTIONS

STRUT NO. 3

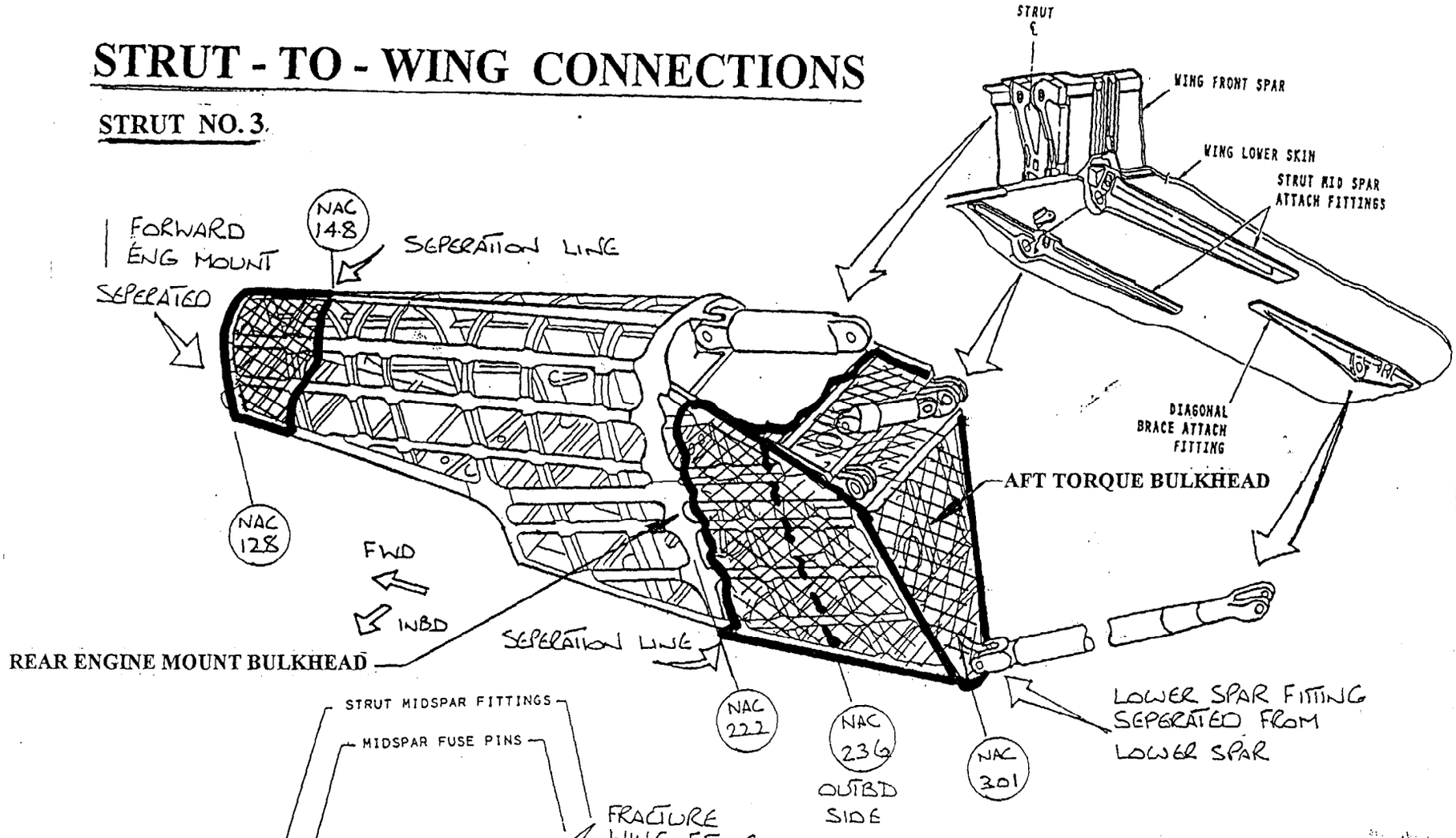

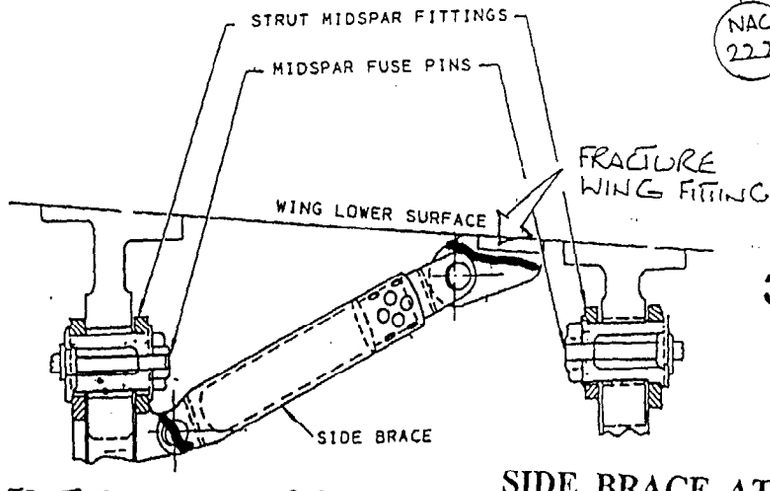

FRACTURE OF MIDSPAR FITTING

3rd Generation" Fuse Pins

SIDE BRACE ATTACHMENT

STRUT-TO-WING CONNECTIONS STRUT NO. 3

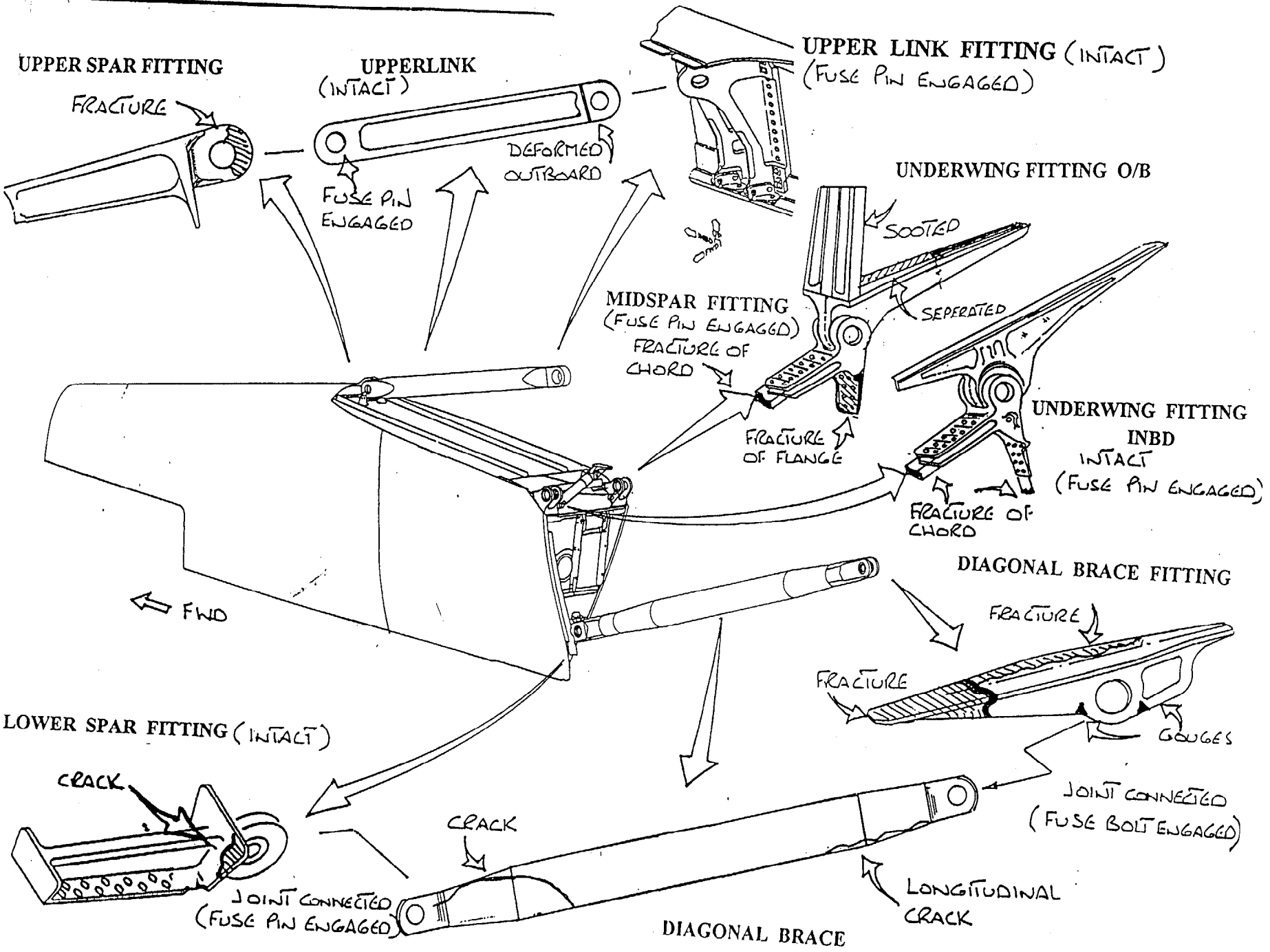

ENGINE TO STRUT ATTACHMENT

STRUT NO. 3

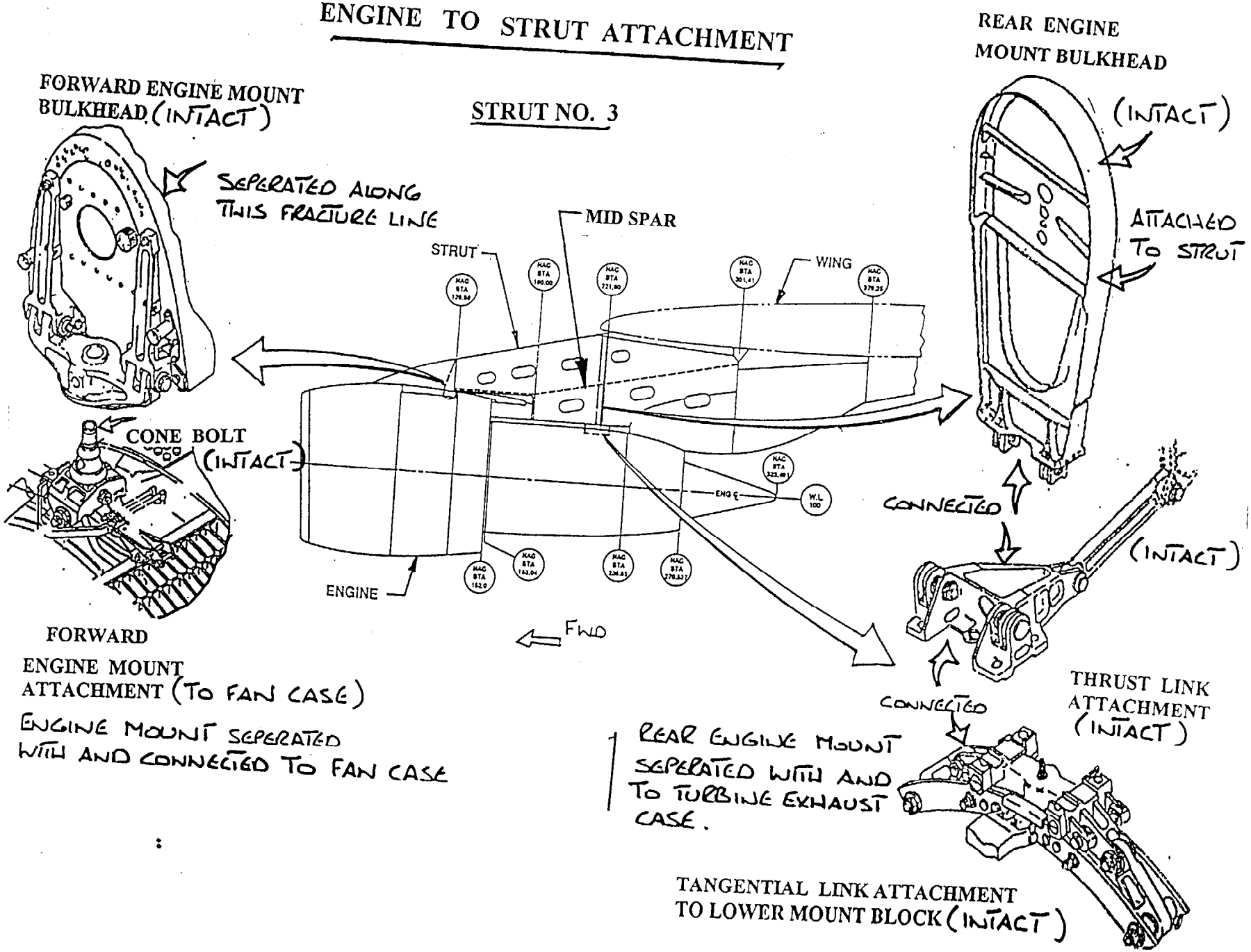

Strut-to-Wing Connections FUSE BOLTS

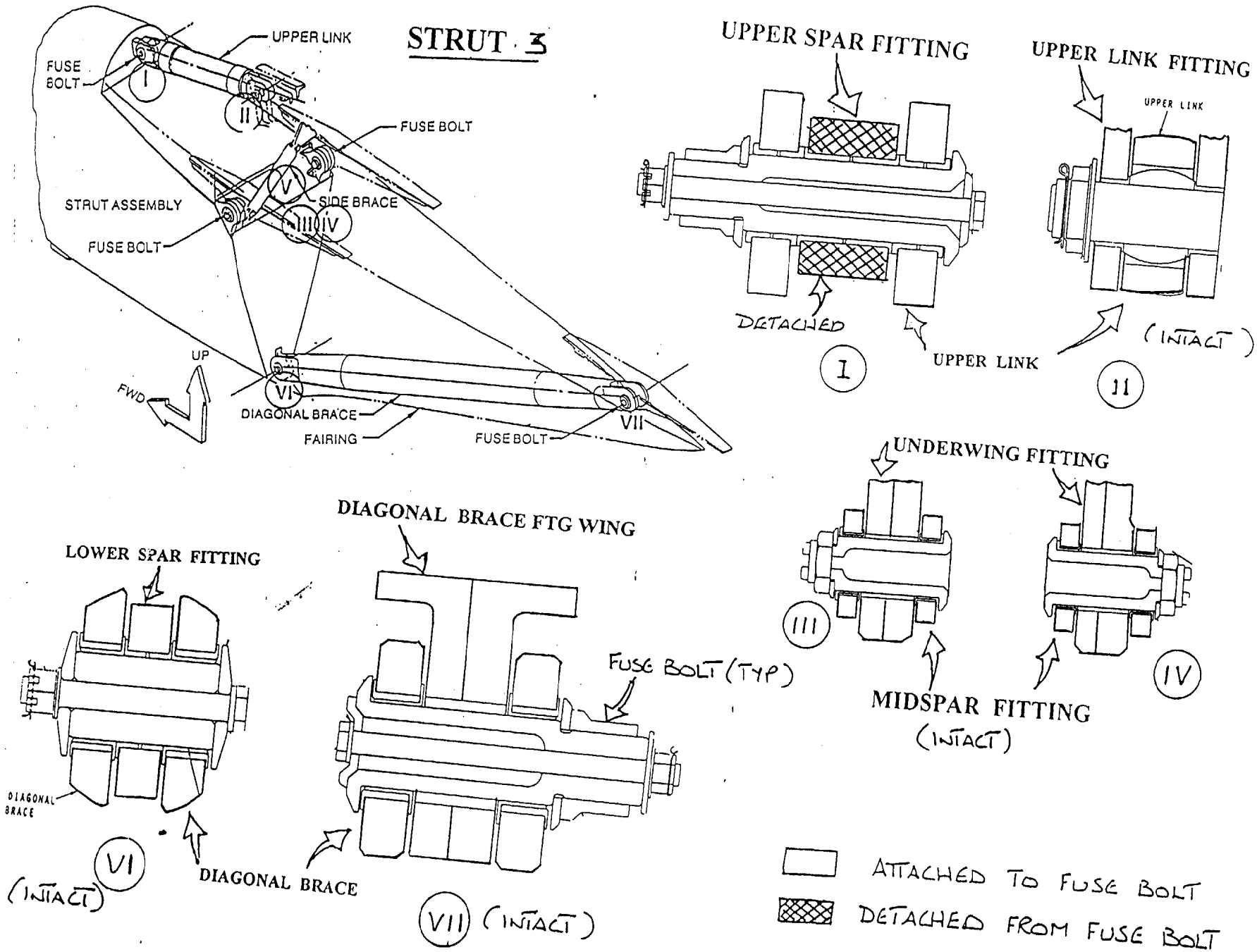

STRUT - TO - WING CONNECTIONS

STRUT NO. 4

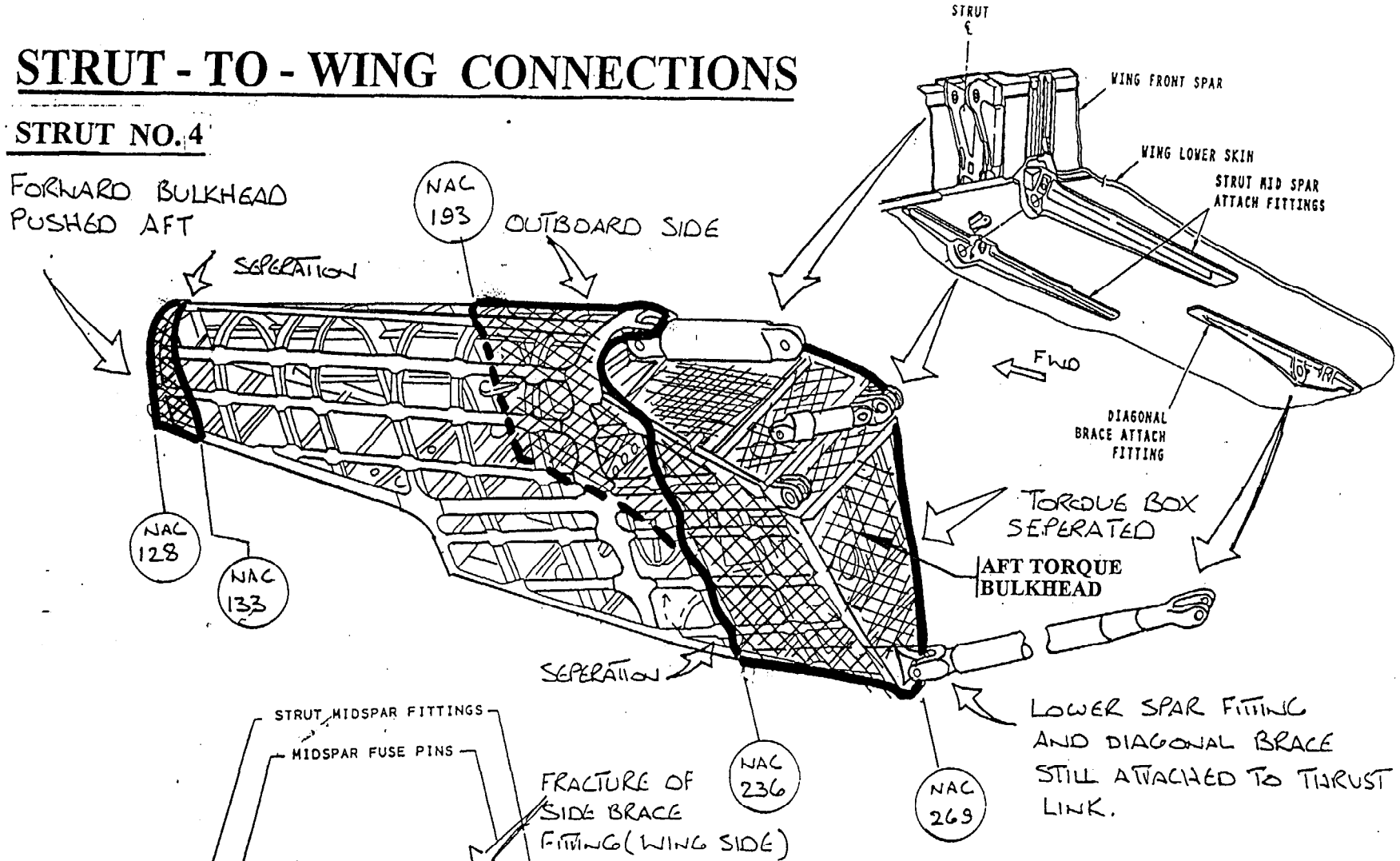

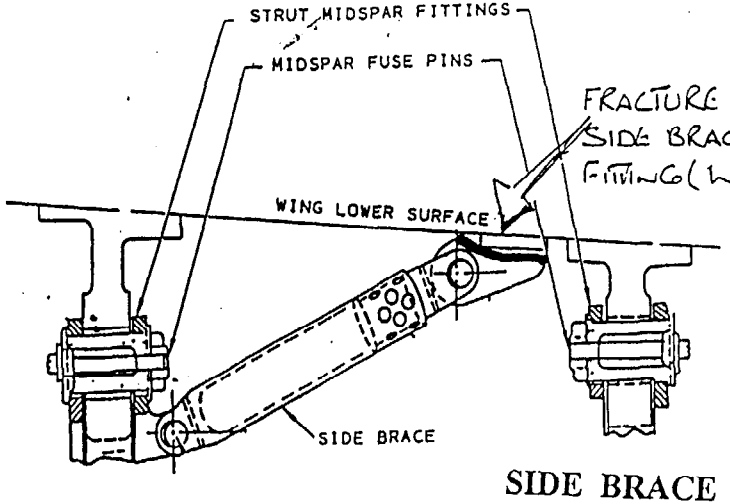

3rd Generation" Fuse Pins

SIDE BRACE ATTACHMENT

STRUT-TO-WING CONNECTIONS STRUT NO. 4

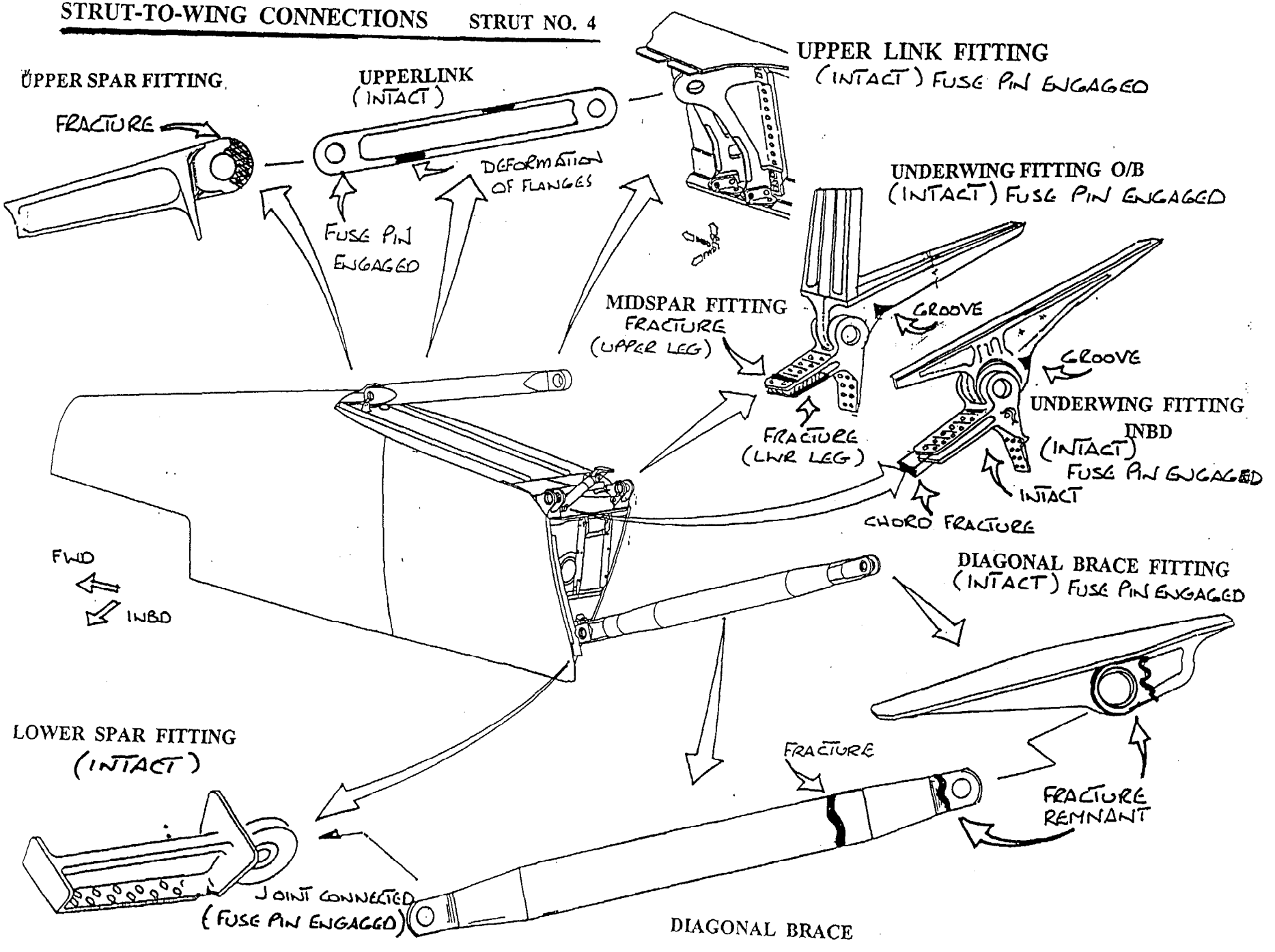

ENGINE TO STRUT ATTACHMENT

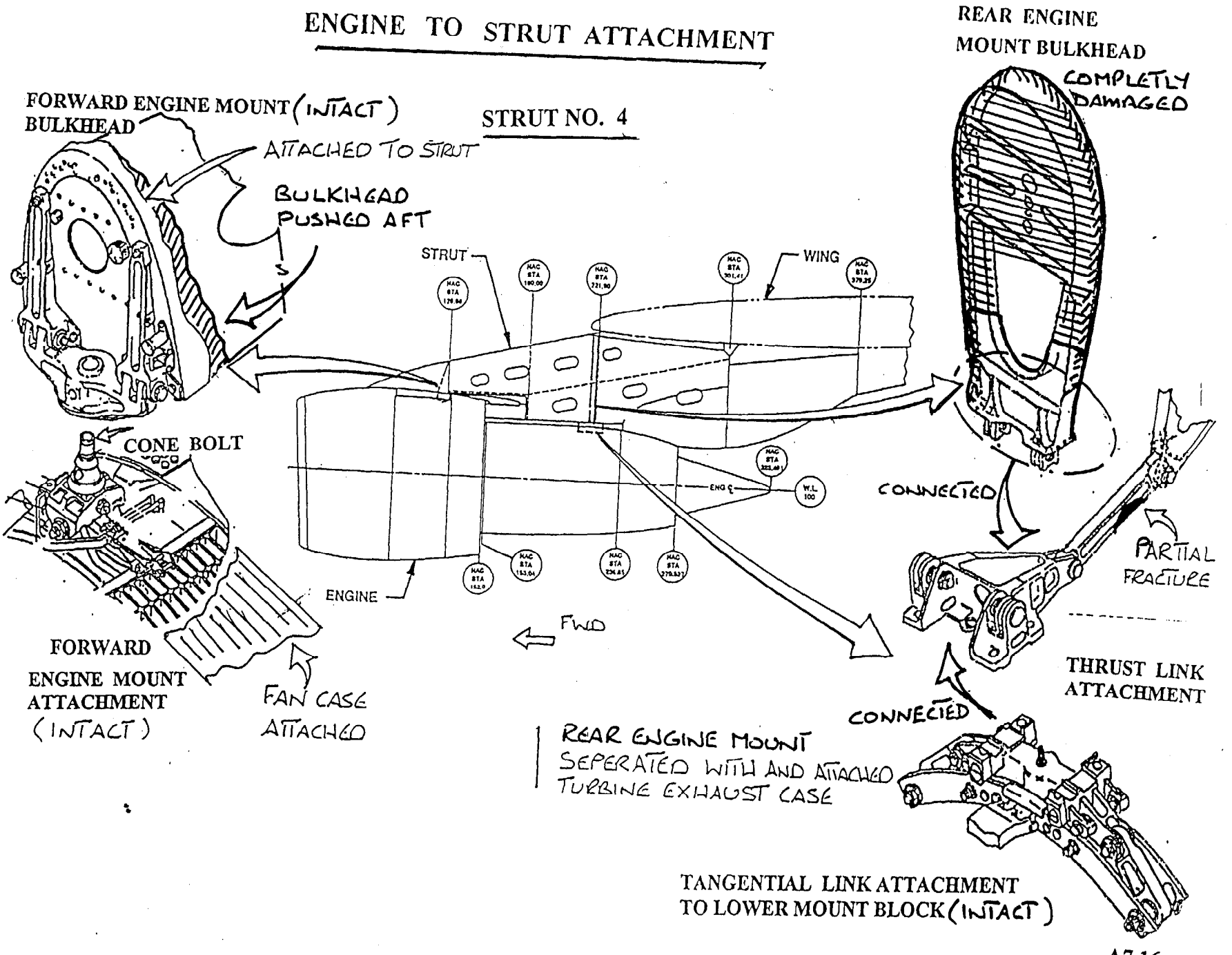

Strut-to-Wing Connections FUSE BOLTS

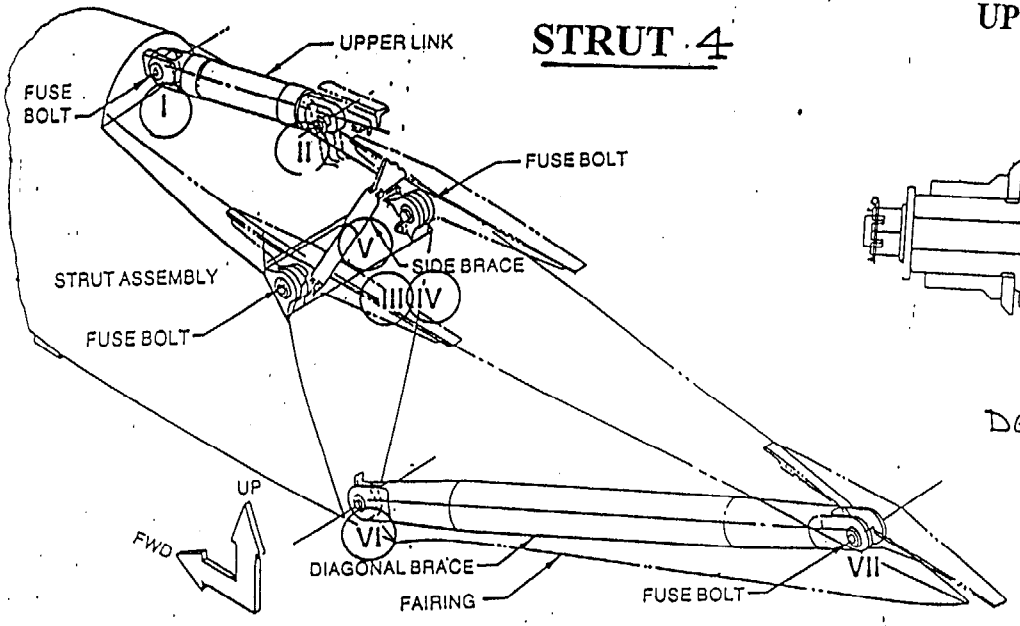

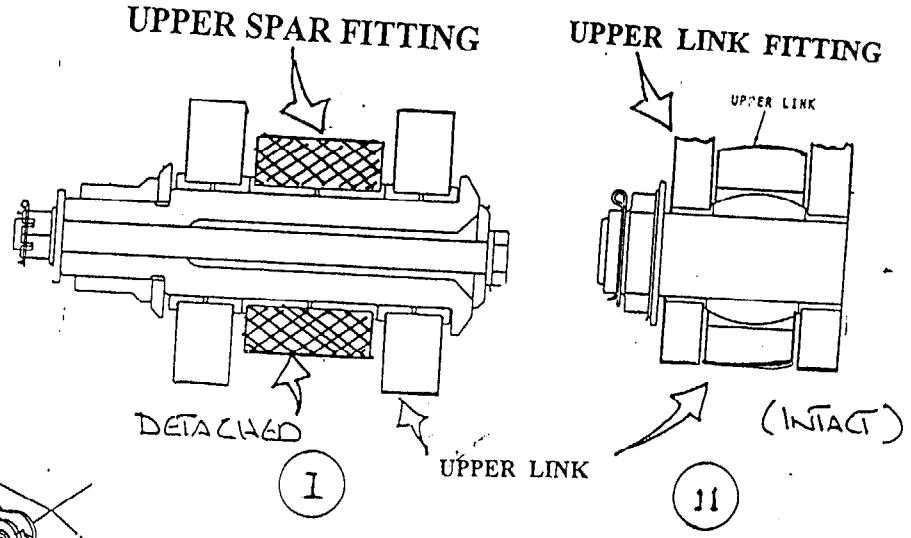

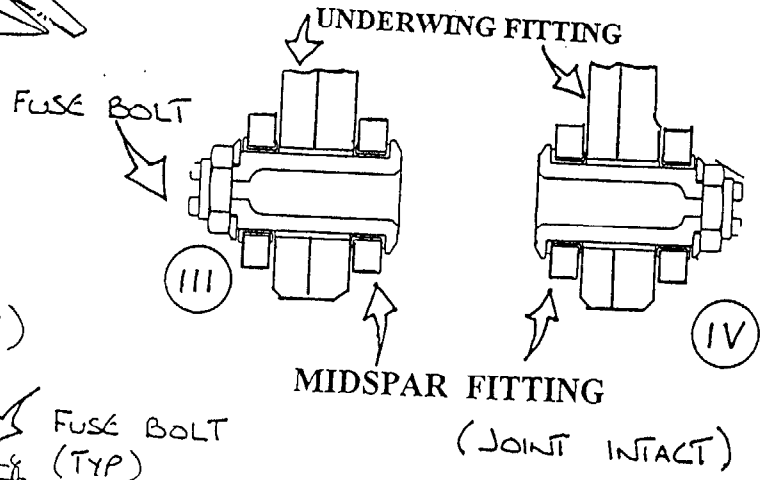

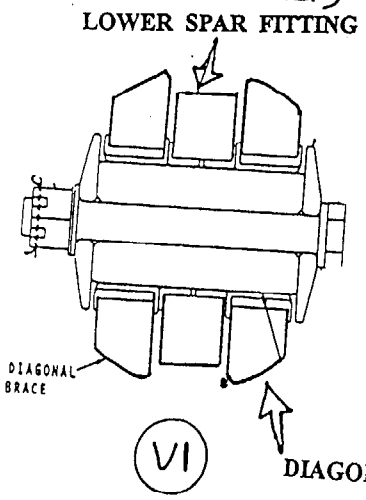

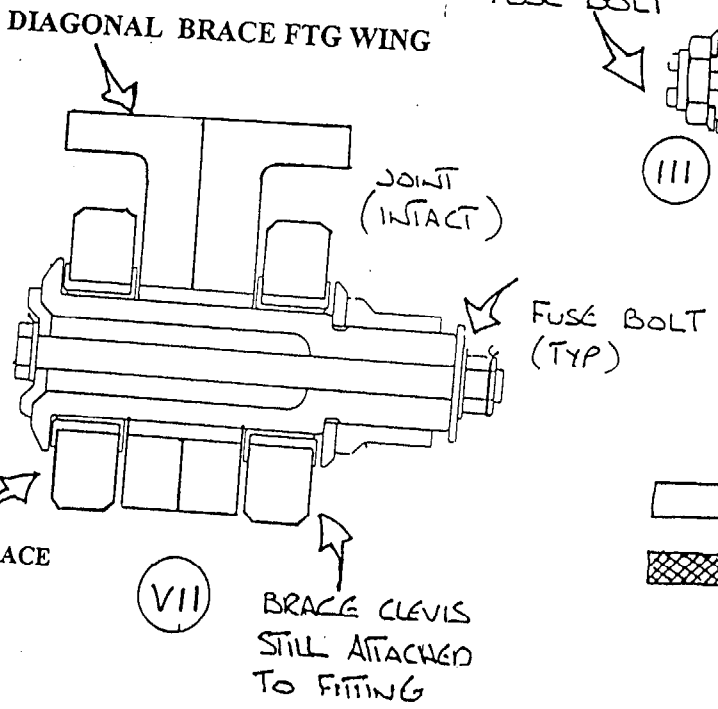

ATTACHED TO FUSE BOLT

DETACHED FROM FUSE BOLT

MIDSPAR FITTING

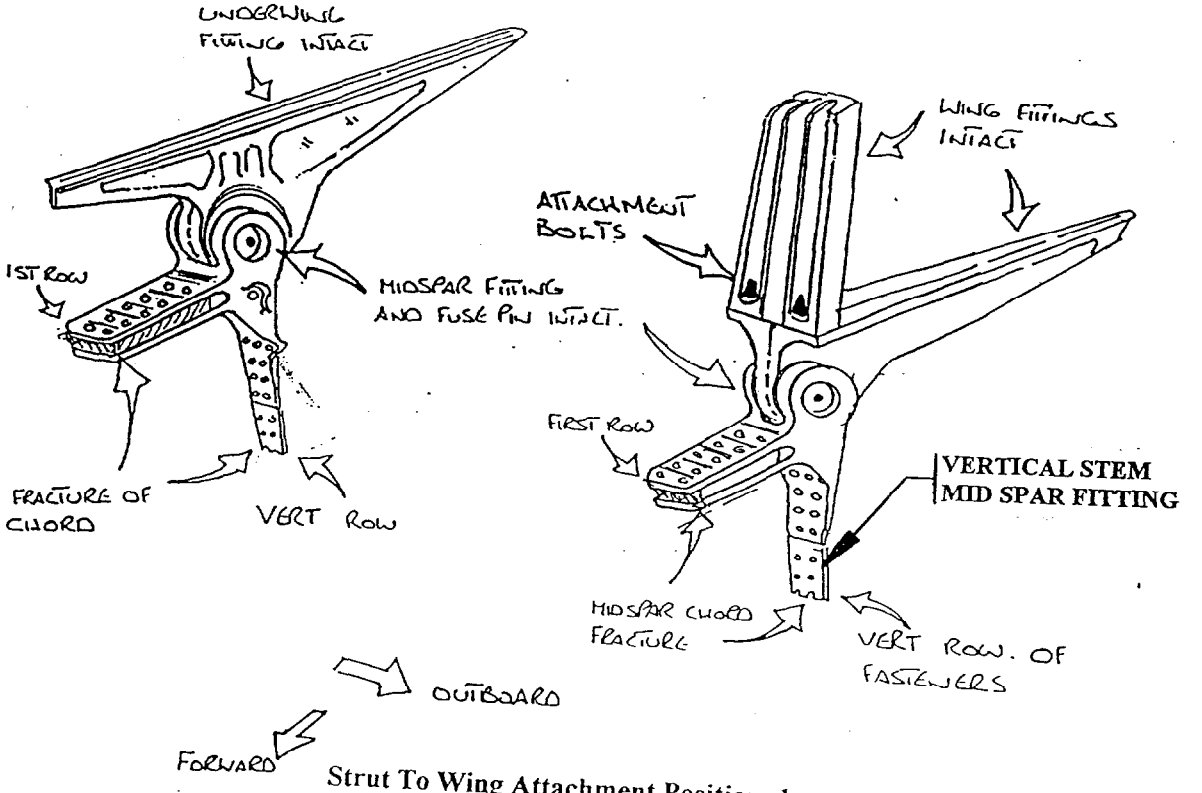

Strut To Wing Attachment Position 1

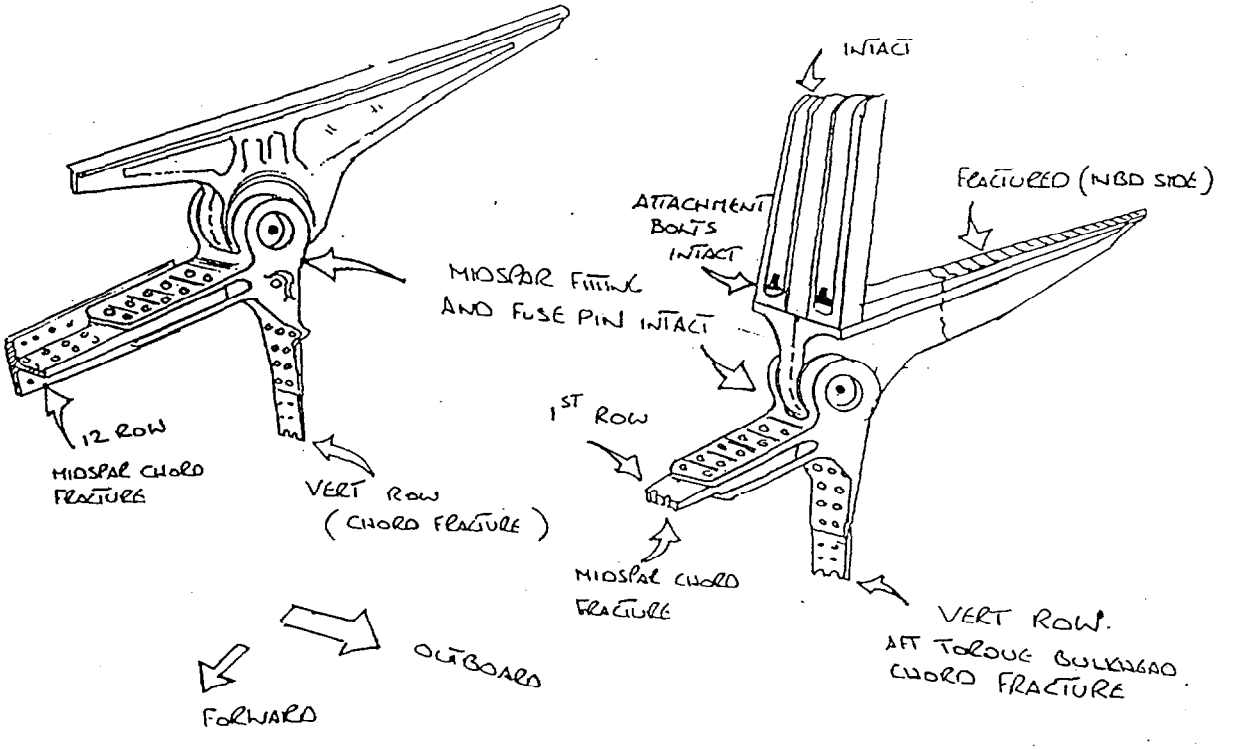

Strut To Wing Attachment Position 2

MIDSPAR FITTING

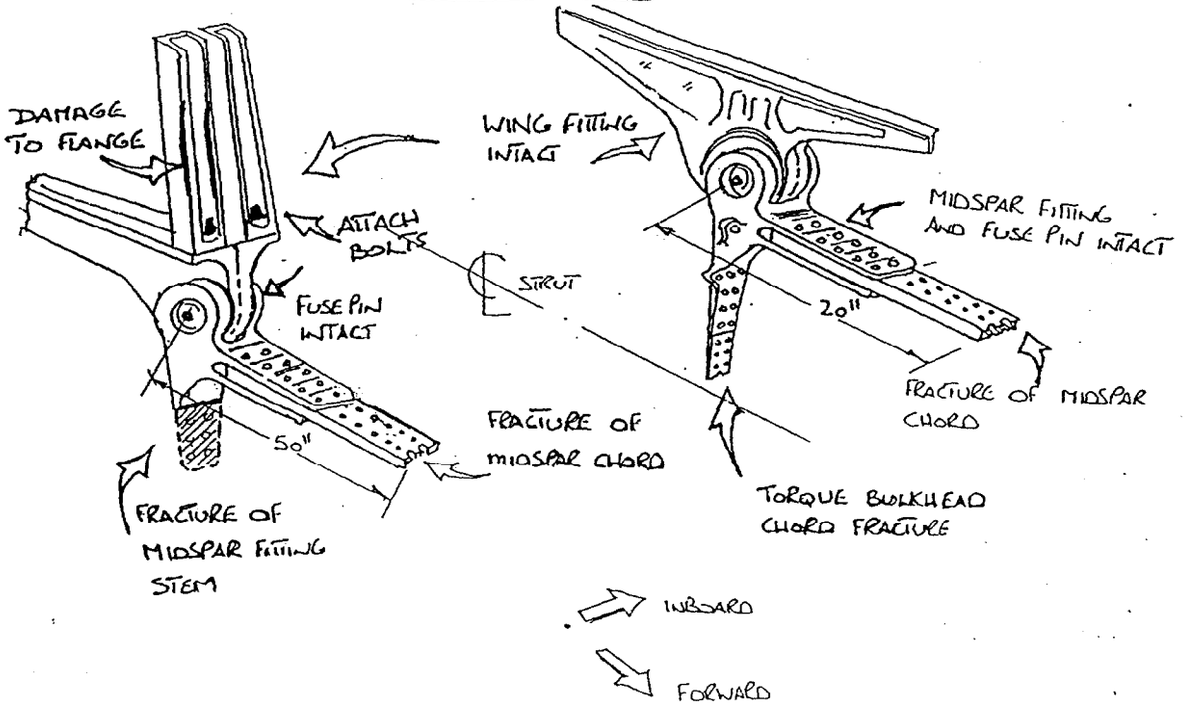

Strut To Wing Attachment Position 3

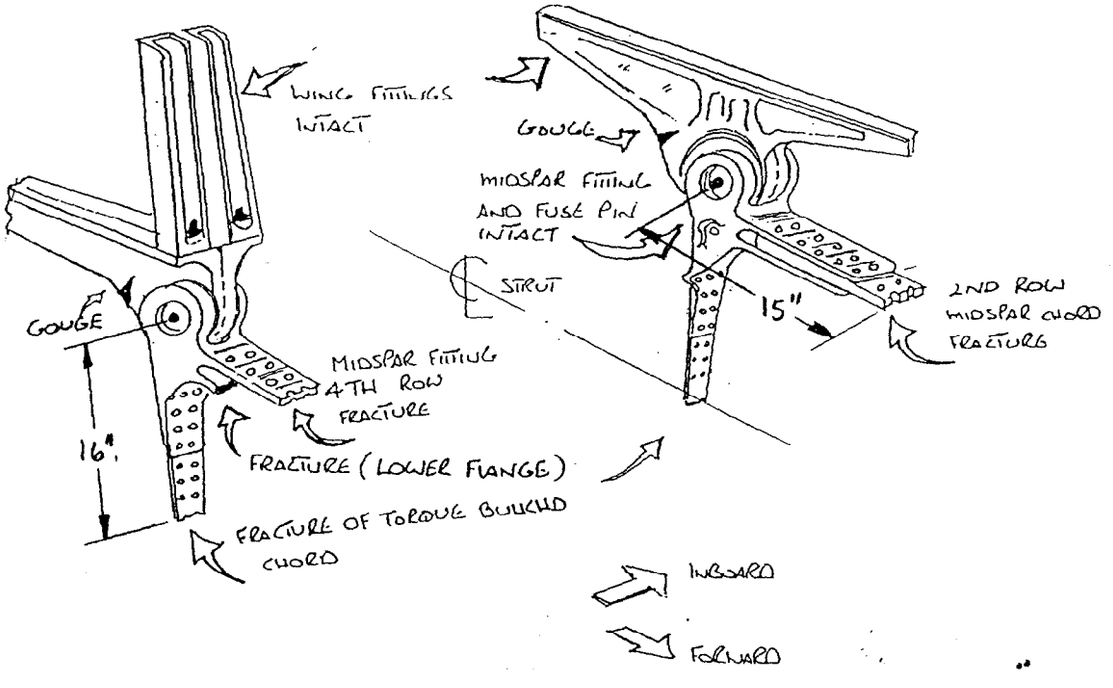

Strut To Wing Attachment Position 4

ENGINE TO STRUT ATTACHMENT
FORWARD AND REAR ENGINE MOUNT

x - Engine Mount Bulkhead and Fittings Attached to Strut

		ENGINE POSITION			
STRUCTURE	FIGURE	1	2	3	4
FORWARD ENGINE MOUNT	A	X	1	1	X
REAR ENGINE MOUNT	B	X	2	X	2/3

1. Assembly seperated from strut and attached to fan case.
2. Attached to turbine exhaust case.
3. Right side tangential link deformed aft.

A

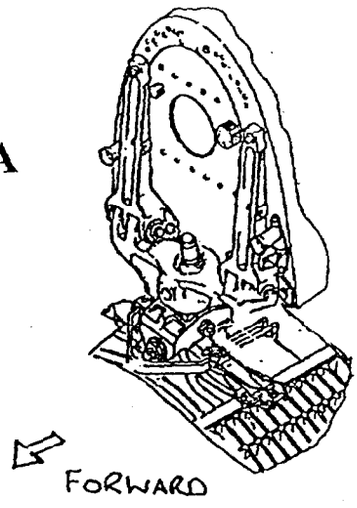

B

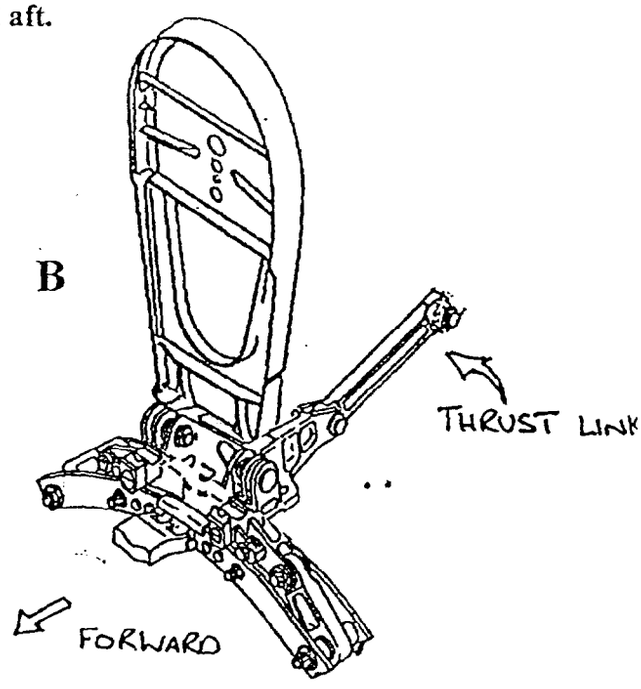

ENGINE MOUNT ATTACHMENT

SUMMARY

WING / STRUT ATTACHMENT AND STRUT FITTINGS RECOVERED

COMPONENT	STRUT 1	STRUT 2	STRUT 3	STRUT 4
MIDSPAR FITTING INBOARD	C876	C884	C186	C186
MIDSPAR FITTING OUTBOARD	C876	Z2830	C186	C186
UNDERWING FITTING INBOARD	C876	C884	C186	C186
UNDERWING FITTING OUTBOARD	C876	Z2830	C186	C186
DIAGONAL BRACE UNDERWING FITTING	Z3082	C006	C209	C186
UPPER LINK FITTING WING	C876	Z3019	C186	C186
FUSE BOLT MIDSPAR INBOARD	C876	C884	C186	C186
FUSE BOLT MIDSPAR OUTBOARD	C876	Z2830	C186	C186
FUSE BOLT DIAGONAL BRACE WING	Z3082	C006	C209	C186
FUSE BOLT DIAGONAL BRACE STRUT	Z3082	X	C209	C186
FUSE BOLT UPPER LINK WING	C876	Z3019	C186	C186
FUSE BOLT UPPER LINK STRUT	C876	X	C186	C186
SIDE LINK	C876	C884	C186	C186
REAR ENGINE MOUNT BLOCK	X	X	C012	X
UPPER LINK	X	X	X	C186
DIAGONAL BRACE	Z3082	X	C209	X
FORWARD ENGINE MOUNT	X	X	X	X
CONE BOLT (FORWARD MOUNT)	X	X	X	X
UPPER SPAR FITTING STRUT	X	X	X	X
LOWER SPAR FITTING STRUT	X	X	X	X
TANGENTIAL LINKS	X	X	C012	X
THRUST LINK	X	X	C012	X
THRUST YOKE	X	X	X	X
STRUT	X	C290	X	C815

NOTE: TARGET NUMBER AS INDICATED X – NO TARGET NUMBER ISSUED