National Transportation Safety Board

Marine Accident Brief

Allision of Fishing Vessel *Ferrigno Boy* with Ventura Harbor Boatyard Travel Lift Pier

Accident no.	DCA15LM029
Vessel name	*Ferrigno Boy*
Accident type	Allision
Location	Ventura Harbor, California, 34°15.0’ N 119°16.0’ W
Date	July 29, 2015
Time	1030 Pacific daylight time (coordinated universal time − 7 hours)
Injuries	None
Damage	Estimated $850,000 to the Ventura Harbor Boatyard travel lift pier
Environmental damage	No pollution reported
Weather	Clear, visibility 6.5 nautical miles, winds east-southeast at 11.4 mph, calm seas, air temperature 71°F
Waterway information	Ventura Harbor is a 274-acre multiple-use recreational and commercial fishing small craft harbor.

On the morning of July 29, 2015, the uninspected commercial fishing vessel *Ferrigno Boy* was returning to Ventura Harbor, California, to offload its squid catch when the main propulsion control system failed to respond to a command for astern propulsion, resulting in an allision with the Ventura Harbor Boatyard travel lift pier. The starboard bow of *Ferrigno Boy* struck the pier, causing a minor inset of the steel hull above the waterline. The lift pier sustained significant structural damage, initially estimated at $850,000. A sailboat moored in the vicinity of the pier also had minor damage. There were no injuries and no reported pollution.

***Ferrigno Boy* pier-side in Port of Los Angeles, California, after the accident.**

The *Ferrigno Boy* was built in 1978 and worked in the California squid fishery, the state's largest sustainable fishery. The vessel was rigged as a purse seiner with fishing nets, associated gear, and a skiff on the stern. Purse seiners use a large wall of netting with floats on the top of the net and a lead line strung through rings at the bottom of the net. The net is deployed in a circle around schooling fish or squid, then the lead line is drawn tight to close, or "purse," the bottom of the net, preventing the catch from escaping by swimming downward.[1] The net is then pulled alongside the fishing vessel where the fish or squid are pumped into chilled water holding tanks. Squid are attracted to light at night and rise to the surface during spawning. Purse seiners like the *Ferrigno Boy* often work in tandem with a "light boat," a vessel with high-luminance spotlights that draw the squid to the surface while the fishing boat deploys its net.

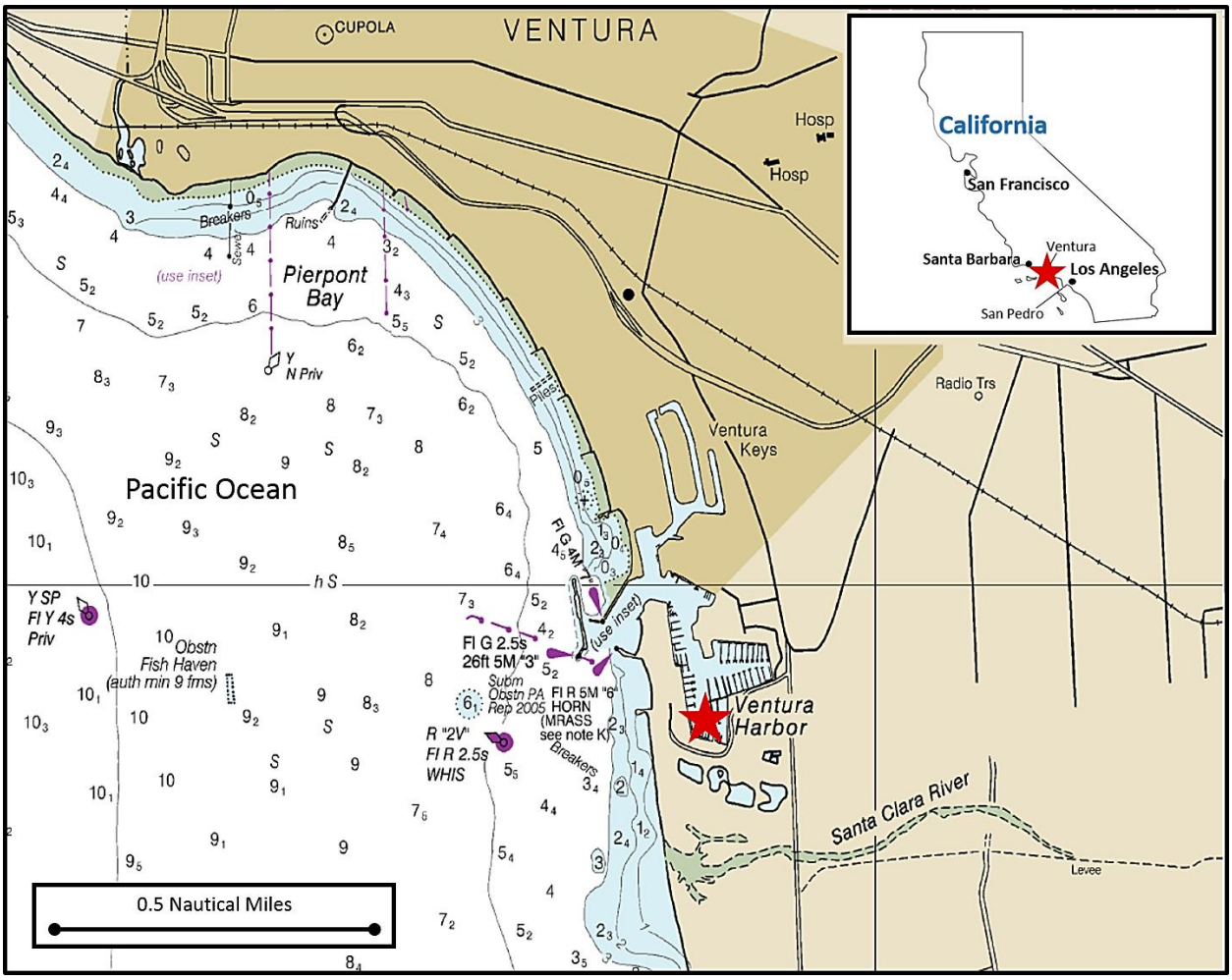

Accident location, Ventura Harbor, California. (Background NOAA Chart 18725)

In the early morning on July 29, the *Ferrigno Boy* was inbound to Ventura Harbor to offload 13 tons of squid hauled out of the water the previous night while fishing with the light boat *Lost Boys*. About 0830, when the vessel was 4 miles outside of the harbor entrance, the captain was woken up by the deckhand on watch. The captain conducted a round of visual checks of the

[1] National Oceanographic and Atmospheric Administration, *Purse Seine: Fishing Gear and Risks to Protected Species*, http://www.nmfs.noaa.gov/pr/interactions/gear/purseseine.htm, accessed October 7, 2016.

machinery spaces prior to relieving the deckhand at the helm. He shut off the ice machines and instructed the crew to prepare the mooring lines for docking and offloading of the squid. Prior to the vessel entering the harbor, the captain shifted from the bridge helm to the port bridge wing control station. He told investigators that he frequently transited the harbor and routinely offloaded at the commercial fish dock during his 30-plus years aboard the vessel.

Photograph of Ventura Harbor with the *Ferrigno Boy* trackline depicted in red. The green line represents the intended maneuver of backing into the commercial fish dock, port side to the pier.

The captain navigated the vessel from the port bridge wing while maneuvering inside the harbor. He stated that he always backed the vessel into the commercial dock and moored port side to the pier to facilitate the offload due to the configuration of equipment on the pier and vessel. As the captain made his approach to the pier, he made a wide turn in order to pass near the end of the pier and thus provide enough maneuvering room to turn the bow away from the berth before backing down. The captain positioned the throttle in reverse and increased the main propulsion engine RPMs to slow the forward movement of the vessel as it continued to turn to port.

After making this maneuvering change, the captain instantly realized something was wrong because the vessel accelerated in the forward direction, and there was a lack of prop wash along the side of the hull that would have been produced by the astern thrust from the propeller. He immediately shut down the main engine and turned hard to starboard to avoid colliding with a sailing vessel and private sport fishing vessels moored in the slips directly ahead of the *Ferrigno Boy*'s projected course. The vessel continued forward at a speed of approximately 3 knots until its starboard bow struck the concrete deck, pilings, and floating docks of the travel lift pier at the Ventura Harbor Boatyard. About 1030, the fishing vessel came to a stop on floating docks that

were parallel to the harbor shoreline. The recreational sailing vessel *Solera*, moored at a slip next to the travel lift pier, was also damaged during the accident when its bowsprit was impacted by *Ferrigno Boy*'s port quarter.

***Ferrigno Boy* after alliding with the Ventura Harbor Boatyard travel lift pier concrete deck, pilings, and floating docks. (Photo by Ventura Harbor Boatyard)**

After the allision, staff members from Ventura Harbor Boatyard, the Ventura Harbor Dockmaster, and nearby boat owners assisted the *Ferrigno Boy* and *Solera* in securing the vessels to the pier and dock. The captain then instructed the crew to lower the skiff to tow the *Ferrigno Boy* to the commercial dock.

A Coast Guard boarding officer, who was conducting a vessel examination in the harbor, arrived on scene shortly after the accident and provided instructions to the captain and crew. About an hour and a half later, the *Ferrigno Boy* was towed by its skiff and was safely moored at the commercial dock.

The boarding officer administered a field sobriety test on the captain with negative results. All seven crewmembers were screened for drugs and alcohol and were directed by their marine employer for post-casualty drug-testing. The engineer tested positive for THC metabolites. All other crewmembers' results were negative.

The navigation controls on the *Ferrigno Boy* consisted of an integrated throttle that controlled both the propulsion engine RPM and the transmission. The transmission coupled the engine driveshaft to the propeller shaft in either the forward or astern (reverse) direction, or decoupled the engine for neutral. The captain told investigators that he went down to the machinery spaces shortly after the accident to ensure the vessel was not taking on water and noticed that the Teleflex Morse shift cable, which linked the throttle controls on the bridge and bridge wings to the transmission's mechanical control valve, was not attached to the valve lever, as depicted in the next picture.

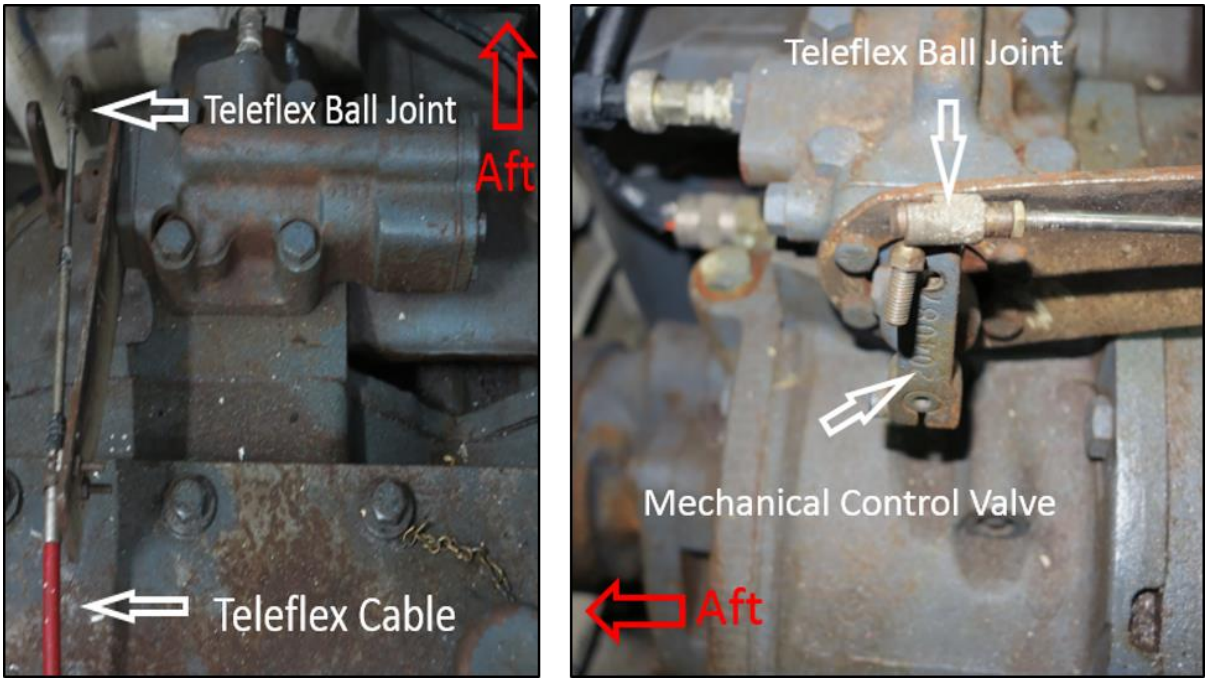

Left: top view of Twin Disc main propulsion marine transmission and Teleflex Morse 33C Supreme cable with Teleflex ball joint control 33C not connected. Right: side view of Teleflex ball joint control 33C with 7/16" stud disconnected and lock washer and nut missing.

Because the Teleflex control cable was disconnected from the mechanical control valve lever, the transmission remained in the forward position despite the captain's command inputs for neutral and reverse. As the captain applied increasing RPM with the throttle, the vessel continued to accelerate ahead until he shut down the engine.

The captain notified the owner and Coast Guard of the disconnected cable and reconnected it. He used two nuts on the ball joint control stud, the threaded connection to the transmission mechanical control valve lever, to prevent it from loosening again. He described for investigators the technique he used to fully tighten the second nut: using an open-ended wrench on the first nut to maintain the position, while applying torque to the second nut with a closed-end wrench. As a precautionary measure, the captain also fastened a closed-end wrench on the second nut and tied a rope around the transmission mechanical control valve prior to departing Ventura Harbor en route to the vessel's home port of San Pedro, California, a day after the accident.

While the *Ferrigno Boy* was pier-side in San Pedro, investigators reviewed documentation, certificates, and records on board the vessel and conducted a postaccident examination of the machinery spaces and navigation control stations. The vessel appeared to be in good order and condition. Investigators performed dockside functional tests of the bridge helm station and port bridge wing control station, checking for corresponding responses to command inputs. The controls performed in accordance with the manufacturer's standards. Ahead and astern function tests of the shift and throttle actuator unit in the engine room responded as designed, and the Teleflex Morse 33C Supreme cables traveled freely with no evidence of damage or obstructions.

During interviews and the review of the vessel's documentation, investigators learned that the main propulsion engine, a Caterpillar Model C32, and transmission, a Twin Disc Model MG-540, were replaced in early 2015 in Ensenada, Mexico. This was done to comply with

California's air pollution regulations for commercial harbor craft.[2] Although a company representative was present during the installation of the new engine and transmission, neither the owner nor the company representative knew the exact method or type of securing device, such as a lock washer, locknut, or double-nut, that was used to refasten the existing Teleflex Morse control cable ball joint to the mechanical control valve lever. Likewise, the captain and crew did not know how the ball joint was secured to the control valve lever prior to the accident.

Teleflex Morse, the control system manufacturer, offers several connection kits that are compatible with the mechanical control valve installed on the *Ferrigno Boy*. According to the manufacturer, the recommended kit for this installation is the Ball Joint Control 33C stud 7/16" X 10-32" as depicted in the image below on the left. This is the same ball joint control stud kit used to fasten the cable to the mechanical control valve lever on the fishing vessel's transmission after the accident. Investigators concluded, therefore, that the disconnection was not due to an improper connection kit. Rather, it was likely due to the control cable Teleflex Morse ball joint 33C stud 7/16" X 10-32" not being correctly fastened to the Twin Disc mechanical control valve shift lever in accordance with the manufacturer's recommended connection kit nut with lock washer.

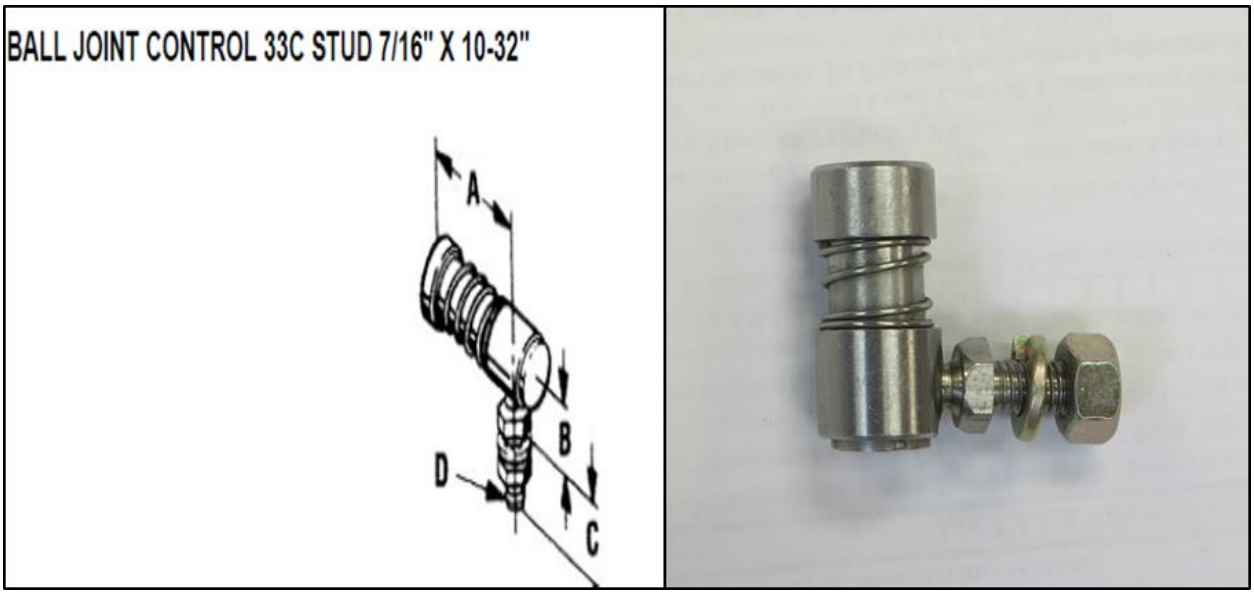

Left: Teleflex Morse Ball Joint Control 33C with 7/16" stud. Right: Ball Joint Control 33C used to refasten the cable to the mechanical control valve lever on the *Ferrigno Boy* after the accident.

On February 4, 2014, the Coast Guard conducted a voluntary commercial fishing vessel dockside safety examination on the *Ferrigno Boy* in San Pedro. Communications, documentation, firefighting, lifesaving, and pollution prevention systems were assessed as satisfactory, and no deficiencies were recorded in the exam. Dockside safety examinations primarily assess basic safety equipment on board a vessel and do not include hull or other machinery assessments. Examinations are valid for 2 years. At the time of the accident, examinations were voluntary and conducted at

[2] Title 17 *California Code of Regulations* Section 93118.5, "Airborne Toxic Control Measure for Diesel Engines on Commercial Harbor Craft Operated Within California Waters and 24 Nautical Miles of the California Baseline," requires lower emissions for marine engines used by vessels, including fishing vessels, designated as commercial harbor craft under the code. These regulations are enforced by the California Air Resources Board (ARB). See also https://www.arb.ca.gov/ports/marinevess/harborcraft/advisories.htm

the request of the vessel owner/operator. (As of October 15, 2015, examinations are required for vessels operated more than 3 miles offshore, such as the *Ferrigno Boy*.)

Probable Cause

The National Transportation Safety Board determines that the probable cause of the allision of the fishing vessel *Ferrigno Boy* with the Ventura Harbor Boatyard travel lift pier and the sailing vessel *Solera* was the fishing vessel's transmission control cable not being correctly fastened to the Twin Disc mechanical control valve shift lever in accordance with the manufacturer's recommended instructions.

Vessel Particulars

Vessel	*Ferrigno Boy*
Owner/operator	Ferrigno Boy Fishing LP / Tri-Marine Fishing Management S.A.
Port of registry	Los Angles, California
Flag	United States
Type	Fishing vessel
Year built	1978
Official number (US)	602455
IMO number	7940376
Construction	Steel
Length	69.6 ft (21.2 m)
Draft	12.5 ft (3.8 m)
Beam/width	25 ft (7.6 m)
Gross ITC tonnage	135 gross tons
Engine power, manufacturer	Single 1,000 hp (745 kW) Caterpillar Model C32, driving one propeller via Twin Disc Model MG-540 4.60 to 1: Marine Transmission
Persons on board	7

For more details about this accident, visit www.ntsb.gov and search for NTSB accident ID DCA15LM029.

Adopted: October 26, 2016

NTSB investigators worked closely with our counterparts from Coast Guard Marine Safety Detachment Santa Barbara throughout this investigation.

The NTSB has authority to investigate and establish the probable cause of any major marine casualty or any marine casualty involving both public and nonpublic vessels under Title 49 *United States Code* 1131. This report is based on factual information either gathered by NTSB investigators or provided by the Coast Guard from its informal investigation of the accident.

The NTSB does not assign fault or blame for a marine casualty; rather, as specified by NTSB regulation, "[NTSB] investigations are fact-finding proceedings with no formal issues and no adverse parties and are not conducted for the purpose of determining the rights or liabilities of any person." Title 49 *Code of Federal Regulations*, 831.4.

Assignment of fault or legal liability is not relevant to the NTSB's statutory mission to improve transportation safety by conducting investigations and issuing safety recommendations. In addition, statutory language prohibits the admission into evidence or use of any part of an NTSB report related to an accident in a civil action for damages resulting from a matter mentioned in the report. Title 49 *United States Code*, 1154(b).